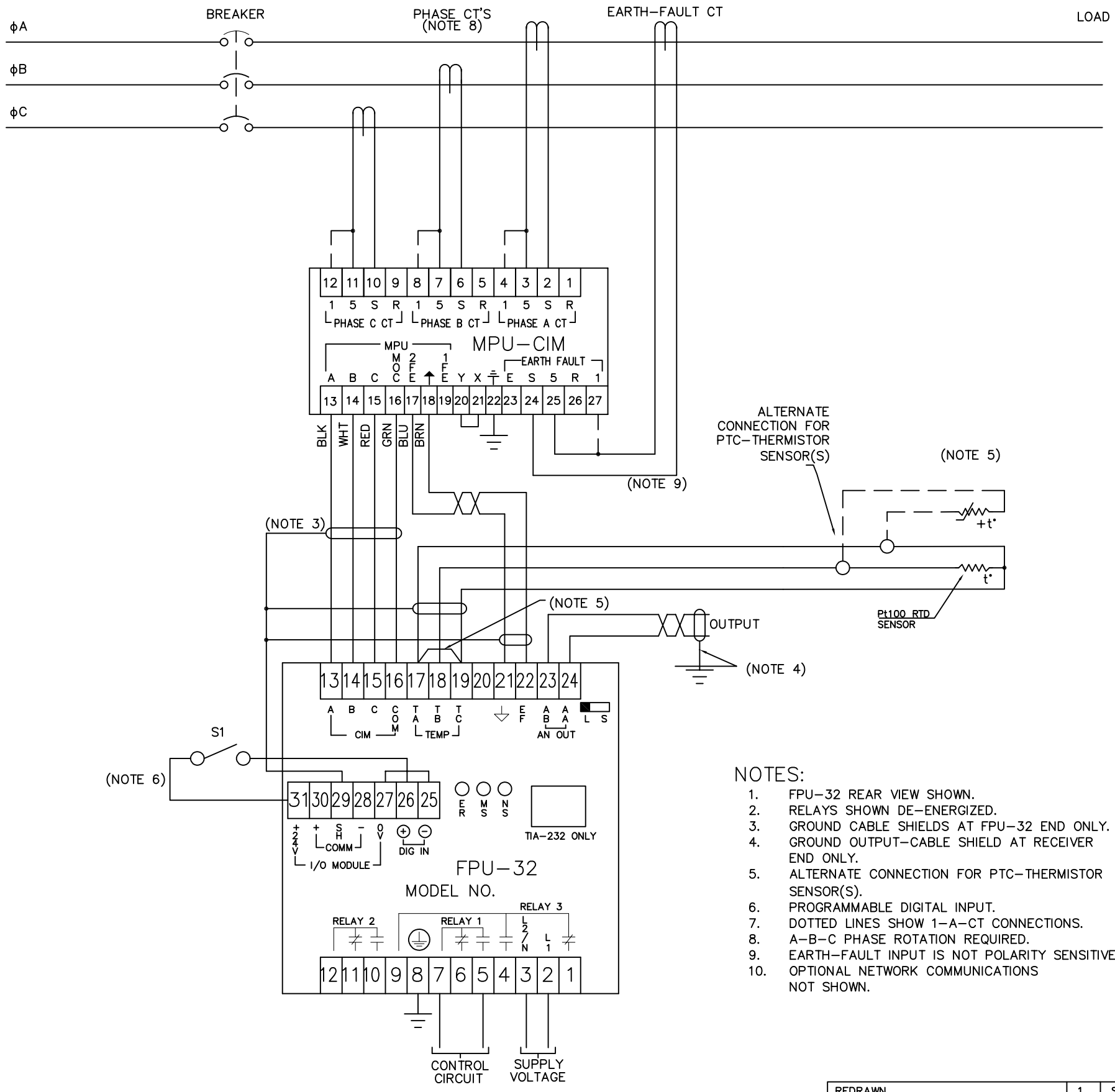

NOTES:

1. FPU-32 REAR VIEW SHOWN.
2. RELAYS SHOWN DE-ENERGIZED.
3. GROUND CABLE SHIELDS AT FPU-32 END ONLY.
4. GROUND OUTPUT-CABLE SHIELD AT RECEIVER END ONLY.
5. ALTERNATE CONNECTION FOR PTC-THERMISTOR SENSOR(S).
6. PROGRAMMABLE DIGITAL INPUT.
7. DOTTED LINES SHOW 1-A-CT CONNECTIONS.
8. A-B-C PHASE ROTATION REQUIRED.
9. EARTH-FAULT INPUT IS NOT POLARITY SENSITIVE.
10. OPTIONAL NETWORK COMMUNICATIONS NOT SHOWN.

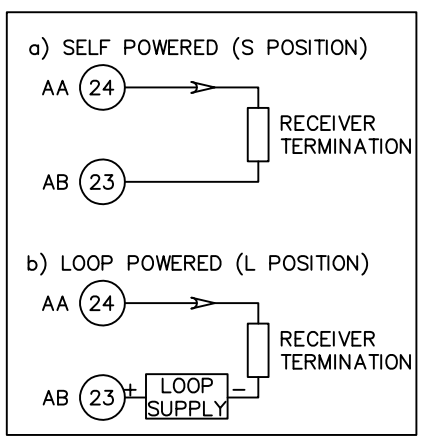

ANALOG-OUTPUT CONNECTIONS.

TYPICAL FPU-32 CONNECTIONS DIAGRAM

REVISION	NO.	BY	DATE
REDRAWN	1	SM	20MAR18
INITIAL RELEASE	0	XX	-----

Littelfuse® STARTCO

FPU
CONNECTION_DIAGRAM

Confidential and Proprietary
The information and know-how shown in this drawing are the property of Littelfuse Startco and may not be copied or reproduced without the written permission of Littelfuse Startco nor may they be used in any manner directly or indirectly detrimental to the interest of Littelfuse Startco.

PURCHASER _____

PROJECT IDENT. _____

PURCHASE ORDER NO. _____

EQUIPMENT NO. _____

REFERENCE DWG. NO. _____

DES D. DESIGNER	DATE	CKD. KH	20MAR18
DWN. SM	20MAR18	APD. APPROVED	DATE
PROJECT NO. PROJECT		SCALE SCALE	
DWG. NO. FPU-32_WIRING		REV. 1	