Voltage Monitoring Relays

455 Series

3-Phase Voltage/Phase Monitor

Description

The 455 series is a three-phase, dual-range voltage monitor that combines load and line side monitoring for a complete protection solution. Load side monitoring alerts the user to contactor failure or impending contactor failure. Line side monitoring protects the motor from damaging fault conditions that may be present prior to the motor starting. This is unique because with other line/load side monitors, the motor must be started before a voltage fault is detected. With the 455 series, the motor is fully protected at all times.

This voltage monitor protects 190–480 V ac, 50*/60 Hz motors regardless of their size. It automatically selects between the 200 V and 400 V range when the user selects the nominal voltage setpoint. Other adjustments include a 2–30 second trip delay, a 2–300 second restart delay (and manual restart), and a voltage unbalance trip point of 2–8%. The voltage monitor's circuitry is powered through the line side connections so there is no need for separate control power, making it easy to install.

Equipped with an infrared LED, the 455 series can communicate with the optional hand-held diagnostic tool, Informer-MS, to obtain valuable information such as real-time voltage, voltage unbalance on both line and load sides, motor run hours, last 20 faults, last 32 motor starts, high- and low-voltage trip points, voltage unbalance trip point, restart and trip delay settings, LED status, and more.

*Note: 50 Hz will increase all delay times by 20%.

Features & Benefits

FEATURES	BENEFITS
Load side monitoring of contactor	Protects motor from contactor failure or worn contacts
Monitors contactor or starter	Prevents rapid cycling
Infrared LED capable	Increases personnel safety for line-of-sight monitoring by using optional Informer-MS

Applications

- Oil rigs
- Compressors and fan motors
- HVAC
- Heat, well, and sump pumps
- Small conveyer motors

©2023 Littelfuse, Inc.
Specifications are subject to change without notice.
Revised: 07/14/2023

Specifications

Input Characteristics	
Frequency	50*/60 Hz
Functional Characteristics	
Low Voltage (% of setpoint)	
Trip	90% ±1%
Reset	93% ±1%
High Voltage (% of setpoint)	
Trip	110% ±1%
Reset	107% ±1%
Voltage Unbalance (NEMA)	
Trip	2–8% adjustable
Reset	Trip setting minus 1%
Trip Delay Time	
Low & High Voltage and Unbalance	2–30 seconds adjustable
Single-phasing Faults (>25% UB)	2 seconds fixed
Restart Delay Time	
After a Fault	Manual, 2–300 seconds adjustable
After a Complete Power Loss	Manual, 2–300 seconds adjustable
After a Motor Shut-down	Manual, 2–300 seconds adjustable
Output Characteristics	
Output Contact Rating (SPDT)	
Pilot Duty	480 VA @ 240 V ac
General Purpose	10 A
High Voltage Relay (-480R)	
Pilot Duty	470 VA @ 600 V ac
General Characteristics	
Ambient Temperature Range	
Operating	-40° to 70 °C (-40° to 158 °F)
Storage	-40° to 80 °C (-40° to 176 °F)
Repeat Accuracy Fixed Conditions	±0.1%
Maximum Input Power	6 W
Terminal Torque	7 in.-lbs.
Wire Size	12–18 AWG
Transient Protection (Internal)	IEC 61000-4-5;1995 ±6 kV
Dimensions	**H** 74.4 mm (2.93”); **W** 133.9 mm (5.27”); **D** 74.9 mm (2.95”)
Weight	1.1 lbs. (17.6 oz., 498.95 g)
Mounting Method	#8 screws

*Note: 50 Hz will increase all delay times by 20%.

Certification & Compliance

UL	UL 508 (File #E68520)
CSA	C22.2 No. 14 (File #46510)
CE	IEC 60947-6-2

Accessories

Informer-MS
A hand-held diagnostic tool designed for use with Littelfuse 455 equipped with an infrared LED transmitter

Informer IR Kit-36
36” infrared adapter cable attaches to the face of the unit to provide remote diagnostics without opening the panel.

©2023 Littelfuse, Inc.
Specifications are subject to change without notice.
Revised: 07/14/2023

Ordering Information

MODEL	LINE VOLTAGE	DESCRIPTION
455	190–480 V ac	Universal line and load side monitor
455480R	380–480 V ac	Used in high voltage applications with pilot duty 470 VA @ 600 V ac
455575	475–600 V ac	For use in Canada or NE USA where 575 V utility power services are common

Dimensions Inches (mm)

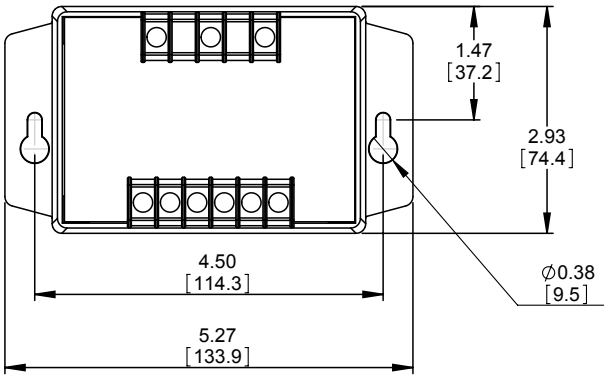

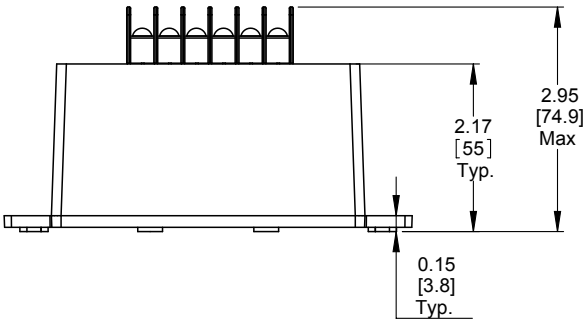

Wiring Diagram

MODEL 455 WITH MOTOR CONTROL USING A 3-POLE CONTACTOR

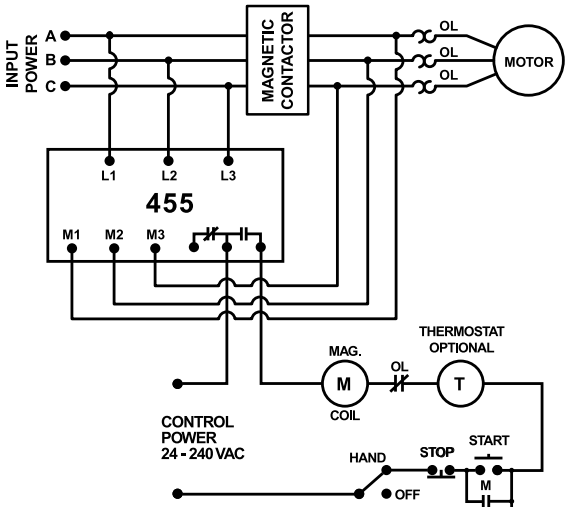

MODEL 455 WITH MOTOR CONTROL USING A 2-POLE CONTACTOR

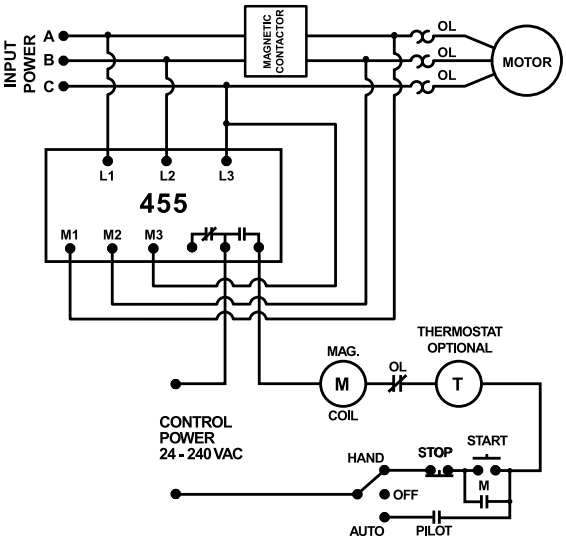

Disclaimer Notice – Information furnished is believed to be accurate and reliable. However, users should independently evaluate the suitability of and test each product selected for their own applications. Littelfuse products are not designed for, and may not be used in, all applications. Read complete Disclaimer Notice at **www.littelfuse.com/product-disclaimer.**

©2023 Littelfuse, Inc.
Specifications are subject to change without notice.

Revised: 07/14/2023