Sonic Fast Recovery Diode

V_{RRM}	=	3300 V
I_{F80}	=	50 A
t_{rr}	=	1650 ns

High Performance Fast Recovery Diode
Low Loss and Soft Recovery
Single Diode

Part number

DHG55I3300FE

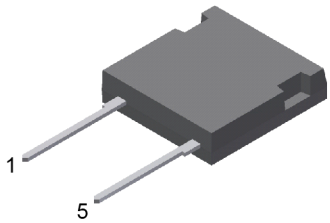

Backside: isolated
see important note page 3

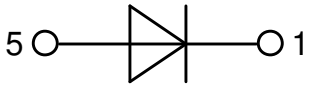

Features / Advantages:

- Planar passivated chips
- Very low leakage current
- Very short recovery time
- Improved thermal behaviour
- Very low Irm-values
- Very soft recovery behaviour
- Avalanche voltage rated for reliable operation
- Soft reverse recovery for low EMI/RFI
- Low Irm reduces:
  - Power dissipation within the diode
  - Turn-on loss in the commutating switch

Applications:

- Antiparallel diode for high frequency switching devices
- Snubber diode
- Free wheeling diode
- Rectifiers in switch mode power supplies (SMPS)
- Uninterruptible power supplies (UPS)

Package: i4-Pac

- Isolation Voltage: 4200 V~
- Industry convenient outline
- RoHS compliant
- Epoxy meets UL 94V-0
- Soldering pins for PCB mounting
- Backside: DCB ceramic
- Reduced weight
- Advanced power cycling

Features / Advantages:

- Planar passivated chips
- Very low leakage current
- Very short recovery time
- Improved thermal behaviour
- Very low Irm-values
- Very soft recovery behaviour
- Avalanche voltage rated for reliable operation
- Soft reverse recovery for low EMI/RFI
- Low Irm reduces:
  - Power dissipation within the diode
  - Turn-on loss in the commutating switch

Applications:

- Antiparallel diode for high frequency switching devices
- Snubber diode
- Free wheeling diode
- Rectifiers in switch mode power supplies (SMPS)
- Uninterruptible power supplies (UPS)

Package: i4-Pac

- Isolation Voltage: 4200 V~
- Industry convenient outline
- RoHS compliant
- Epoxy meets UL 94V-0
- Soldering pins for PCB mounting
- Backside: DCB ceramic
- Reduced weight
- Advanced power cycling

Fast Diode

Symbol	Definition	Conditions		Ratings min.	typ.	max.	Unit
V_{RSM}	*max. non-repetitive reverse blocking voltage*		T_{VJ} = 25°C			3300	V
V_{RRM}	*max. repetitive reverse blocking voltage*		T_{VJ} = 25°C			3300	V
I_R	*reverse current, drain current*	V_R = 3300 V	T_{VJ} = 25°C			100	µA
		V_R = 3300 V	T_{VJ} = 125°C			2	mA
V_F	*forward voltage drop*	I_F = 60 A	T_{VJ} = 25°C			3.38	V
		I_F = 120 A				4.35	V
		I_F = 60 A	T_{VJ} = 125°C			3.39	V
		I_F = 120 A				4.70	V
I_{FAV}	*average forward current*	T_C = 80°C	T_{VJ} = 150°C			50	A
		DC d = 1					
V_{F0}	*threshold voltage* } *for power loss calculation only*		T_{VJ} = 150°C			2.50	V
r_F	*slope resistance*					14.5	mΩ
R_{thJC}	*thermal resistance junction to case*					0.45	K/W
R_{thCH}	*thermal resistance case to heatsink*				0.15		K/W
P_{tot}	*total power dissipation*		T_C = 25°C			280	W
I_{FSM}	*max. forward surge current*	t = 10 ms; (50 Hz), sine; V_R = 0 V	T_{VJ} = 45°C			600	A
C_J	*junction capacitance*	V_R = 1800 V f = 1 MHz	T_{VJ} = 25°C		16		pF
I_{RM}	*max. reverse recovery current*	I_F = 60 A; V_R = 1800 V; $-di_F/dt$ = 500 A/µs	T_{VJ} = 25°C		55		A
			T_{VJ} = 125°C		65		A
t_{rr}	*reverse recovery time*		T_{VJ} = 25°C		1650		ns
			T_{VJ} = 125°C		2400		ns

Package i4-Pac				Ratings			
Symbol	**Definition**	**Conditions**		**min.**	**typ.**	**max.**	**Unit**
I_{RMS}	*RMS current*	per terminal				70	A
T_{VJ}	*virtual junction temperature*			-40		150	°C
T_{op}	*operation temperature*			-40		125	°C
T_{stg}	*storage temperature*			-40		150	°C
Weight					5.5		g
F_C	*mounting force with clip*			20		120	N
$d_{Spp/App}$	*creepage distance on surface | striking distance through air*		*terminal to terminal*	13.8			mm
$d_{Spb/Apb}$			*terminal to backside*	5.1			mm
V_{ISOL}	*isolation voltage*	t = 1 second	50/60 Hz, RMS; I_{ISOL} ≤ 1 mA	4200			V
		t = 1 minute		2500			V

Product Marking

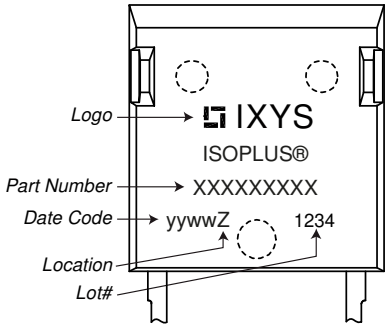

Part description

D = Diode
H = Sonic Fast Recovery Diode
G = extreme fast
55 = Current Rating [A]
I = Single Diode
3300 = Reverse Voltage [V]
FE = i4-Pac (2HV)

Ordering	Ordering Number	Marking on Product	Delivery Mode	Quantity	Code No.
Standard	DHG55I3300FE	DHG55I3300FE	Tube	25	516110

Equivalent Circuits for Simulation

** on die level* T_{VJ} = 150°C

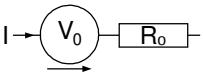

		Fast Diode	
$V_{0\,max}$	*threshold voltage*	2.5	V
$R_{0\,max}$	*slope resistance **	14.5	mΩ

Package i4-Pac				Ratings			
Symbol	**Definition**	**Conditions**		**min.**	**typ.**	**max.**	**Unit**
I_{RMS}	*RMS current*	per terminal				70	A
T_{VJ}	*virtual junction temperature*			-40		150	°C
T_{op}	*operation temperature*			-40		125	°C
T_{stg}	*storage temperature*			-40		150	°C
Weight					5.5		g
F_C	*mounting force with clip*			20		120	N
$d_{Spp/App}$	*creepage distance on surface | striking distance through air*		*terminal to terminal*	13.8			mm
$d_{Spb/Apb}$			*terminal to backside*	5.1			mm
V_{ISOL}	*isolation voltage*	t = 1 second	50/60 Hz, RMS; I_{ISOL} ≤ 1 mA	4200			V
		t = 1 minute		2500			V

Product Marking

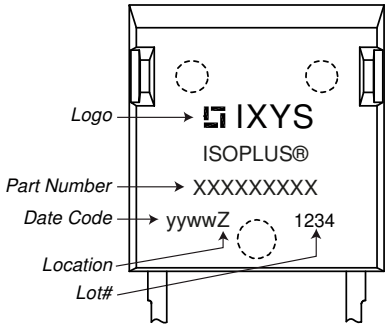

Part description

D = Diode
H = Sonic Fast Recovery Diode
G = extreme fast
55 = Current Rating [A]
I = Single Diode
3300 = Reverse Voltage [V]
FE = i4-Pac (2HV)

Ordering	Ordering Number	Marking on Product	Delivery Mode	Quantity	Code No.
Standard	DHG55I3300FE	DHG55I3300FE	Tube	25	516110

Equivalent Circuits for Simulation

** on die level* T_{VJ} = 150°C

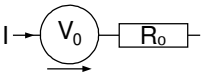

		Fast Diode	
$V_{0\,max}$	*threshold voltage*	2.5	V
$R_{0\,max}$	*slope resistance **	14.5	mΩ

Outlines i4-Pac

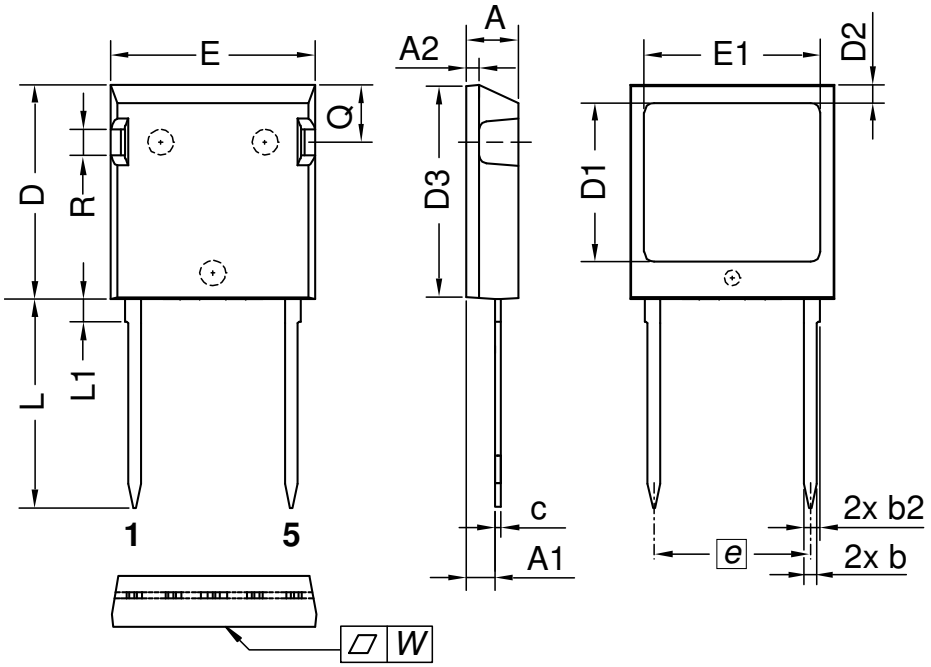

Dim.	Millimeter		Inches	
	min	max	min	max
A	4.83	5.21	0.190	0.205
A1	2.59	3.00	0.102	0.118
A2	1.17	2.16	0.046	0.085
b	1.14	1.40	0.045	0.055
b2	1.47	1.73	0.058	0.068
c	0.51	0.74	0.020	0.029
D	20.80	21.34	0.819	0.840
D1	14.99	15.75	0.590	0.620
D2	1.65	2.03	0.065	0.080
D3	20.30	20.70	0.799	0.815
E	19.56	20.29	0.770	0.799
E1	16.76	17.53	0.660	0.690
e	15.24 BSC		0.600 BSC	
L	19.81	21.34	0.780	0.840
L1	2.11	2.59	0.083	0.102
Q	5.33	6.20	0.210	0.244
R	2.54	4.57	0.100	0.180
W	-	0.10	-	0.004

Die konvexe Form des Substrates ist typ. < 0.05 mm über der Kunststoffoberfläche der Bauteilunterseite
The convex bow of substrate is typ. < 0.05 mm over plastic surface level of device bottom side

Important note:

External clearances between pins and between pins and tab may be insufficient to prevent flash over under all conditions. It is the customer's responsibility to apply additional insulation appropriate to the application.
ISOPLUS264 is designed to isolate a max continuous operation voltage (DC) of 1700 V. The peak test voltage of 4200 V assures safety for transient voltages only. The package is not tested for partial discharge.
If the product is used outside the package design voltage range the customer must use additional electrical insulation. Extra insulation layers should be used both between the tab and any heatsink and between any conducting clip and the top surface of the package particularly when metal parts (such as a heatsink or a clip) are in contact. Please note that the intention of this package is to provide customers with an encapsulated die for high voltage application but the responsibility rests entirely with the customer to ensure for safe operation. Bodily injury cannot be excluded if this warning is disregarded. Device implementation is the end user's responsibility.

For a low FIT rate over lifetime failures due to SEB (Single Event Burnout) and an adequate voltage derating should be considered.

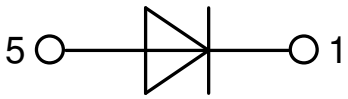

Outlines i4-Pac

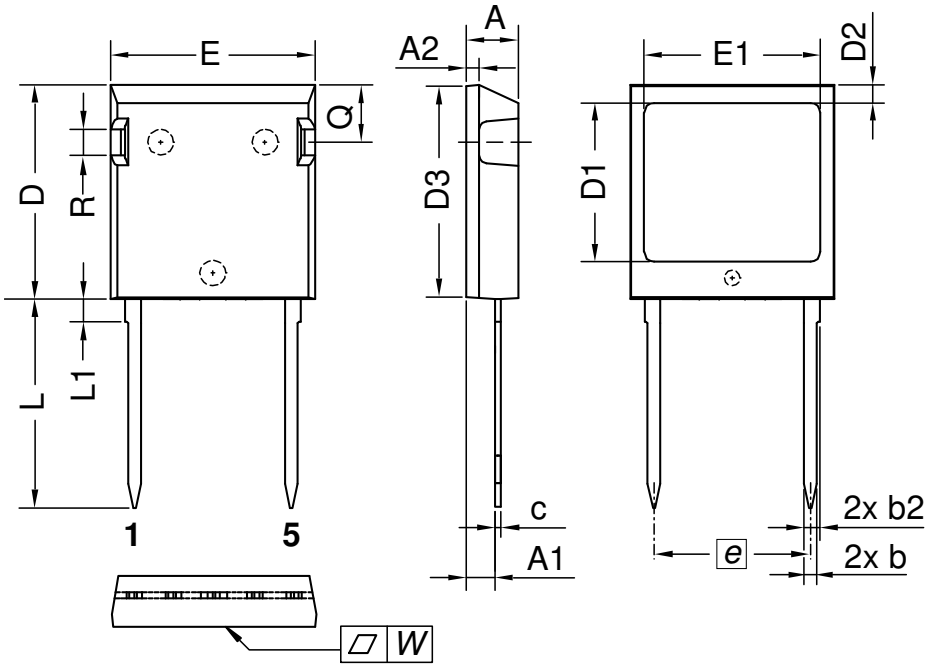

Dim.	Millimeter		Inches	
	min	max	min	max
A	4.83	5.21	0.190	0.205
A1	2.59	3.00	0.102	0.118
A2	1.17	2.16	0.046	0.085
b	1.14	1.40	0.045	0.055
b2	1.47	1.73	0.058	0.068
c	0.51	0.74	0.020	0.029
D	20.80	21.34	0.819	0.840
D1	14.99	15.75	0.590	0.620
D2	1.65	2.03	0.065	0.080
D3	20.30	20.70	0.799	0.815
E	19.56	20.29	0.770	0.799
E1	16.76	17.53	0.660	0.690
e	15.24 BSC		0.600 BSC	
L	19.81	21.34	0.780	0.840
L1	2.11	2.59	0.083	0.102
Q	5.33	6.20	0.210	0.244
R	2.54	4.57	0.100	0.180
W	-	0.10	-	0.004

Die konvexe Form des Substrates ist typ. < 0.05 mm über der Kunststoffoberfläche der Bauteilunterseite
The convex bow of substrate is typ. < 0.05 mm over plastic surface level of device bottom side

Important note:

External clearances between pins and between pins and tab may be insufficient to prevent flash over under all conditions. It is the customer's responsibility to apply additional insulation appropriate to the application.
ISOPLUS264 is designed to isolate a max continuous operation voltage (DC) of 1700 V. The peak test voltage of 4200 V assures safety for transient voltages only. The package is not tested for partial discharge.
If the product is used outside the package design voltage range the customer must use additional electrical insulation. Extra insulation layers should be used both between the tab and any heatsink and between any conducting clip and the top surface of the package particularly when metal parts (such as a heatsink or a clip) are in contact. Please note that the intention of this package is to provide customers with an encapsulated die for high voltage application but the responsibility rests entirely with the customer to ensure for safe operation. Bodily injury cannot be excluded if this warning is disregarded. Device implementation is the end user's responsibility.

For a low FIT rate over lifetime failures due to SEB (Single Event Burnout) and an adequate voltage derating should be considered.