POWR-GARD® Fuse Datasheet

CLASS L – KLLU SERIES FUSES

600 V ac • Time-Delay • 601–4000 A

Description

KLLU series fuses meet or exceed UL requirements for UL Class L fuses. The KLLU series offers an economical alternative to KLPC POWR-PRO® fuse with a slightly higher peak let through current.

Applications

- Service switches
- Switchboard mains and feeders
- Motor control center mains
- Large motor branch circuits
- Circuit breaker protection

Features/Benefits

- Current-Limiting
- Easily coordinated with other system components
- 200 kA AC Interrupting Rating

Specifications

Voltage Ratings	Ac: 600 V Dc: 300 V
Interrupting Ratings	Ac: 200 kA Dc: 20 kA
Ampere Range	601–4000 A
Approvals	Standard 248-10, Class L UL Listed (File: E81895) CSA Certified (File: LR29862) DC: Littelfuse self-certified

Ordering Information

AMPERE RATINGS					
601	750	1000	1400	1800	3000
650	800	1200	1500	2000	3500
700	900	1350	1600	2500	4000

SERIES	AMPERAGE	CATALOG NUMBER	ORDERING NUMBER
KLLU	601	KLLU601	KLLU601.X

Web Resources

TC Curves, downloadable CAD drawings and other technical information: **www.littelfuse.com/kllu**

Dimensions

Please refer to the Class L dimensions page 2

Peak Let-Thru Curve

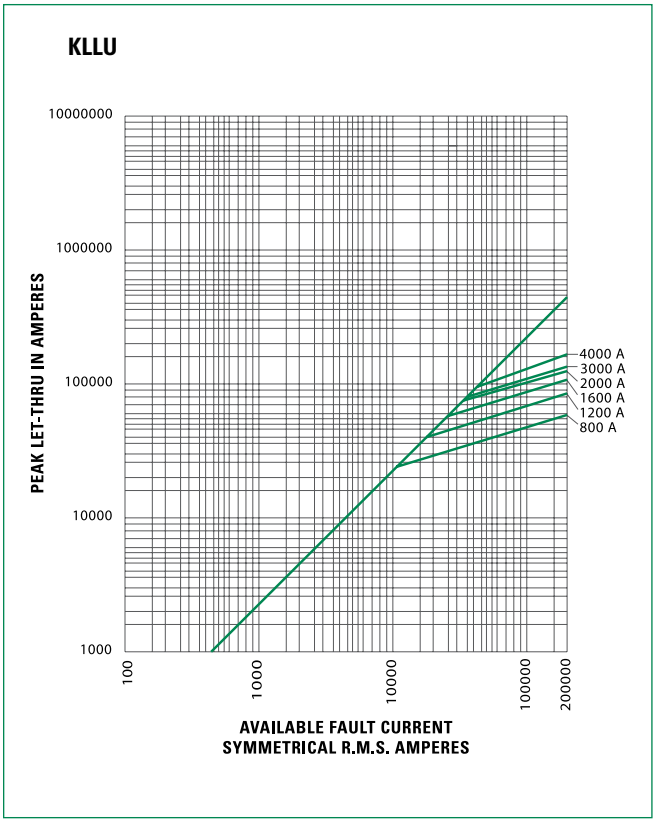

Note: for more information, see Current-Limmiting Effects table

© 2022 Littelfuse, Inc.

Current-Limiting Effects of KLLU (600 V) Fuses

SHORT-CIRCUIT CURRENT*	APPARENT RMS SYMMETRICAL CURRENT FOR VARIOUS FUSE RATINGS					
	800 A	1200 A	1600 A	2000 A	3000 A	4000 A
5,000	5,000	5,000	5,000	5,000	5,000	5,000
10,000	10,000	10,000	10,000	10,000	10,000	10,000
15,000	11,900	15,000	15,000	15,000	15,000	15,000
20,000	13,000	18,500	20,000	20,000	20,000	20,000
25,000	14,000	20,000	25,000	25,000	25,000	25,000
30,000	14,500	21,000	26,500	30,000	30,000	30,000
35,000	15,000	22,000	28,500	34,000	35,000	35,000
40,000	16,000	23,000	30,000	35,000	37,000	40,000
50,000	17,000	24,000	32,000	38,000	39,000	44,000
60,000	18,000	26,000	34,000	42,000	43,000	50,000
80,000	19,000	28,000	36,000	44,000	46,000	54,500
100,000	21,000	30,000	38,000	46,000	48,000	57,500
150,000	24,000	35,000	44,000	50,000	51,000	68,000
200,000	26,000	38,000	48,000	53,000	60,000	74,000

*Prospective RMS Symmetrical Amperes Short-Circuit Current • *Note: Data derived from Peak Let-Thru Curves*

Dimensions

AMPERES	FIG. NO.	DIMENSIONS INCHES (mm)												
		A	B	C	D	E	F	G	H	J	K	L	M	N
601–800	1	3¾ (95.3)	5¾ (146.1)	6¾ (171.5)	—	—	8⅝ (219.1)	—	—	2 (50.8)	2½ (63.5)	⅜ (9.5)	⅝ x 1⅛ (15.9) x (28.6)	—
900–1200	2	3¾ (95.3)	5¾ (146.1)	6¾ (171.5)	9¼ (235.0)	9½ (241.3)	10¾ (273.1)	—	—	2 (50.8)	2½ (63.5)	⅜ (9.5)	⅝ x ¾ (15.9) x (19.1)	⅝ x 1⅛ (15.9) x (28.6)
1300–1600	2	3¾ (95.3)	5¾ (146.1)	6¾ (171.5)	9¼ (235.0)	9½ (241.3)	10¾ (273.1)	—	—	2⅜ (60.3)	3 (76.2)	7⁄16 (11.1)	⅝ x ¾ (15.9) x (19.1)	⅝ x 1⅛ (15.9) x (28.6)
1800–2000	2	3¾ (95.3)	5¾ (146.1)	6¾ (171.5)	9¼ (235.0)	9½ (241.3)	10¾ (273.1)	—	—	2¾ (69.9)	3½ (88.9)	½ (12.7)	⅝ x ¾ (15.9) x (19.1)	⅝ x 1⅛ (15.9) x (28.6)
2100–2500	3	4 (101.6)	5¾ (146.1)	6¾ (171.5)	9¼ (235.0)	9½ (241.3)	10¾ (273.1)	1⅝ (41.3)	1¾ (44.5)	3½ (88.9)	5 (127.0)	¾ (19.1)	⅝ x ¾ (15.9) x (19.1)	⅝ x 1⅛ (15.9) x (28.6)
2501–3000	3	4 (101.6)	5¾ (146.1)	6¾ (171.5)	9¼ (235.0)	9½ (241.3)	10¾ (273.1)	1⅝ (41.3)	1¾ (44.5)	4 (101.6)	5 (127.0)	¾ (19.1)	⅝ x ¾ (15.9) x (19.1)	⅝ x 1⅛ (15.9) x (28.6)
3500–4000	4	4 (101.6)	5¾ (146.1)	6¾ (171.5)	9¼ (235.0)	9½ (241.3)	10¾ (273.1)	1¾ (44.5)	3¼ (82.6)	4¾ (120.7)	5¾ (146.1)	¾ (19.1)	⅝ x 1⅜ (15.9) x (34.9)	⅝ x 1⅜ (15.9) x (34.9)

FIG. 1

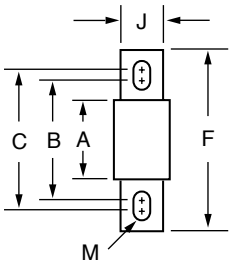

FIG. 2

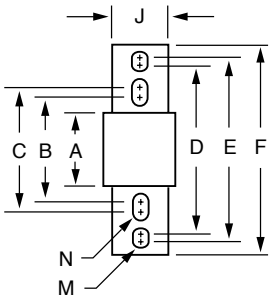

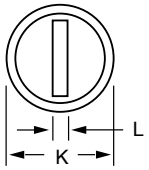

FIG. 3

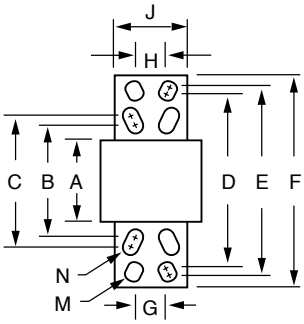

FIG. 4

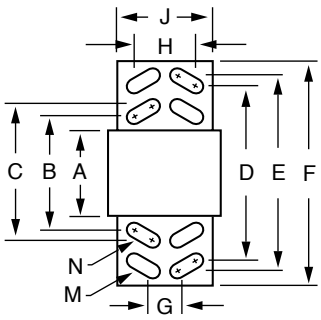

© 2022 Littelfuse, Inc.