342 Series

Panel Mount Enclosed Fuseholders for 3AG/AB Fuses

Dimensions

General Application / Straight Terminal Product Dimensions

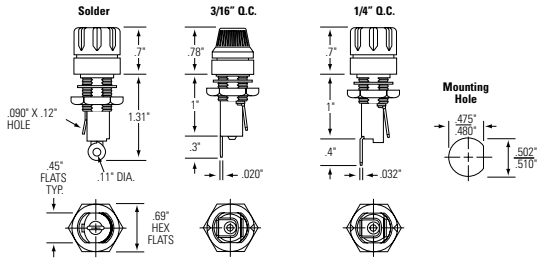

General Application / Right Angle Terminal Product Dimensions

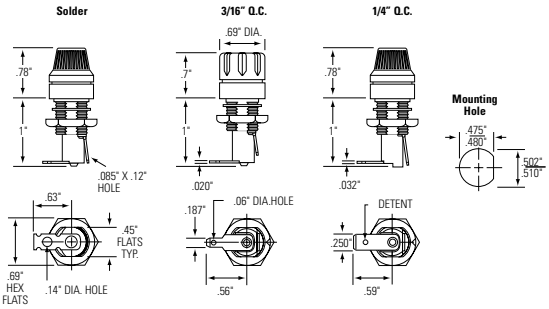

Watertight Product Dimensions

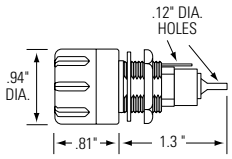

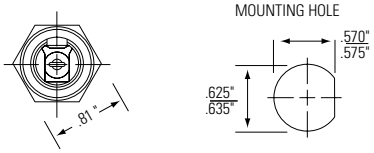

Product Characteristics

	General Application Products	Watertight Product
Compatible Fuses	3AG/AB	
Electrical	Rated at 20 amperes for any voltage up to 250	
Ambient Temperature	–40°C to +85°C	
Dielectric Strength	2400 volts minimum	1500 volts minimum
Mounting	Withstands 15 lb.-in. mounting torque; maximum panel thickness: .187"	Withstands 15 lb.-in. mounting torque; maximum panel thickness is .250"
Molded Parts	Black thermoplastic (UL94 V-0)	Black thermoset (UL94 V-0)
Seal	Neoprene washer provide drip-proof protection on the front side of the panel (upon request)	O-ring provides a watertight seal on the front side of the panel per MIL-PRF-19207
Terminals	Copper & copper alloy. Tin plated, except ¼" Quick-Connect terminals are nickel plated	Copper & copper alloy. Tin plated
Hardware	Comes with a mounting nut and neoprene washer	O-rings (2) and hex nut, unassembled
Ingression Protection Rating	IP40	IP67

Agency Approvals

Agency	Agency File Number
	E14721
	7316 (*Except 342 006)

Kit part Numbering System

0 3 4 2 0 0 4 8 H X P L

Packing	Accessories
H or HX	**Washer and Nut**
Each component is packed in separate bags with 100 pieces	H or HX Pack kits includes washers and nuts
Just X	**P**
1 piece of each component packed together in 1 bag	Drip proof washer installed in knob
	L
	Lockwasher

0 3 4 2 0 0 4 X

Additional Information

Resources | Accessories | Samples

© 2022 Littelfuse, Inc.
Specifications are subject to change without notice.
Revised: GD. 02/07/22

342 Series

Panel Mount Enclosed Fuseholders for 3AG/AB Fuses

General Application

Ordering PN	Body	Knob	Washer	Lockwasher	Nut	Angle	Connect	Knob Type
03420004H	03420004HX010	03420104HX040	09010002H	N /A	09030012H	Right	Solder	Flutted
03420004HXL	03420004HX010	03420104HX040	09010002H	09050023H	09030012H	Right	Solder	Flutted
03420004HXP	03420004HX010	03420104HXP040	09010002H	N /A	09030012H	Right	Solder	Flutted
03420004HXPL	03420004HX010	03420104HXP040	09010002H	09050023H	09030012H	Right	Solder	Flutted
03420004X	342004-010	342104-040	N / A	N / A	N / A	Right	Solder	Flutted
03420012H	03420012HX010	03420012HX040	09010002H	N /A	09030012H	Straight	Solder	Knurled
03420012HXL	03420012HX010	03420012HX040	09010002H	09050023H	09030012H	Straight	Solder	Knurled
03420012HXP	03420012HX010	03420012HXP040	09010002H	N /A	09030012H	Straight	Solder	Knurled
03420012X	342012-010	342012-040	N / A	N / A	N / A	Straight	Solder	Knurled
03420014H	03420012HX010	03420104HX040	09010002H	N /A	09030012H	Straight	Solder	Flutted
03420014HXL	03420012HX010	03420104HX040	09010002H	09050023H	09030012H	Straight	Solder	Flutted
03420014X	342012-010	342104-040	N / A	N / A	N / A	Straight	Solder	Flutted
03420022H	03420004HX010	03420012HX040	09010002H	N /A	09030012H	Right	Solder	Knurled
03420022HXL	03420004HX010	03420012HX040	09010002H	09050023H	09030012H	Right	Solder	Knurled
03420022X	342004-010	342012-040	N / A	N / A	N / A	Right	Solder	Knurled
03420028H	03420028HX010	03420104HX040	09010002H	N /A	09030012H	Right	3/16" Q.C.	Flutted
03420028HXL	03420028HX010	03420104HX040	09010002H	09050023H	09030012H	Right	3/16" Q.C.	Flutted
03420028X	342028-010	342104-040	N / A	N / A	N / A	Right	3/16" Q.C.	Flutted
03420038H	03420038HX010	03420104HX040	09010002H	N /A	09030012H	Straight	3/16" Q.C.	Flutted
03420038HXL	03420038HX010	03420104HX040	09010002H	09050023H	09030012H	Straight	3/16" Q.C.	Flutted
03420038X	342038-010	342104-040	N / A	N / A	N / A	Straight	3/16" Q.C.	Flutted
03420048H	03420028HX010	03420012HX040	09010002H	N /A	09030012H	Right	3/16" Q.C.	Knurled
03420048HXL	03420028HX010	03420012HX040	09010002H	09050023H	09030012H	Right	3/16" Q.C.	Knurled
03420048HXPL	03420028HX010	03420012HXP040	09010002H	09050023H	09030012H	Right	3/16" Q.C.	Knurled
03420048X	342028-010	342012-040	N / A	N / A	N / A	Right	3/16" Q.C.	Knurled
03420058H	03420038HX010	03420012HX040	09010002H	N /A	09030012H	Straight	3/16" Q.C.	Knurled
03420058HXL	03420038HX010	03420012HX040	09010002H	09050023H	09030012H	Straight	3/16" Q.C.	Knurled
03420058X	342038-010	342012-040	N / A	N / A	N / A	Straight	3/16" Q.C.	Knurled
03420828H	03420828HX010	03420104HX040	09010002H	N /A	09030012H	Right	1/4" Q.C.	Flutted
03420828HXL	03420828HX010	03420104HX040	09010002H	09050023H	09030012H	Right	1/4" Q.C.	Flutted
03420828X	342828-010	342104-040	N / A	N / A	N / A	Right	1/4" Q.C.	Flutted
03420838H	03420838HX010	03420104HX040	09010002H	N /A	09030012H	Straight	1/4" Q.C.	Flutted
03420838HXA	342838-010	342104-040	901-002	N / A	903-012	Straight	1/4" Q.C.	Flutted
03420838HXL	03420838HX010	03420104HX040	09010002H	09050023H	09030012H	Straight	1/4" Q.C.	Flutted
03420838HXP	03420838HX010	03420104HXP040	09010002H	N /A	09030012H	Straight	1/4" Q.C.	Flutted
03420838X	342838-010	342104-040	N / A	N / A	N / A	Straight	1/4" Q.C.	Flutted
03420848H	03420828HX010	03420012HX040	09010002H	N /A	09030012H	Right	1/4" Q.C.	Knurled
03420848HXL	03420828HX010	03420012HX040	09010002H	09050023H	09030012H	Right	1/4" Q.C.	Knurled
03420848X	342828-010	342012-040	N / A	N / A	N / A	Right	1/4" Q.C.	Knurled
03420858H	03420838HX010	03420012HX040	09010002H	N /A	09030012H	Straight	1/4" Q.C.	Knurled
03420858HXL	03420838HX010	03420012HX040	09010002H	09050023H	09030012H	Straight	1/4" Q.C.	Knurled
03420858HXP	03420838HX010	03420012HXP040	09010002H	N /A	09030012H	Straight	1/4" Q.C.	Knurled
03420858HXPL	03420838HX010	03420012HXP040	09010002H	09050023H	09030012H	Straight	1/4" Q.C.	Knurled
03420858X	342838-010	342012-040	N / A	N / A	N / A	Straight	1/4" Q.C.	Knurled
03420858XXL	342838-010	342012-040	N / A	905-023	N / A	Straight	1/4" Q.C.	Knurled

Watertight

Ordering PN	Body	Knob	Washer	Lockwasher	Nut	Angle	Connect	Knob Type
03420006T	342006-1	342006-2	901-262	N / A	903-068	Straight	Solder	Flutted
03420006Z	342006-1	342006-2	901-262	N / A	903-068	Straight	Solder	Flutted
03420006ZXA	342006-1	342006-2	901-262	N / A	903-068	Straight	Solder	Flutted

Note: T = 10 pieces assembled per bag. **Z** = 200 pieces assembled per bag **ZXA** = 200 pieces of body and knob assembled, wahser and nut in separate bags

Disclaimer Notice - Information furnished is believed to be accurate and reliable. However, users should independently evaluate the suitability of and test each product selected for their own applications. Littelfuse products are not designed for, and may not be used in, all applications. Read complete Disclaimer Notice at: www.littelfuse.com/disclaimer-electronics.

© 2022 Littelfuse, Inc.
Specifications are subject to change without notice.
Revised: GD. 02/07/22