IXYS UK WESTCODE

Date:- 9th May, 2013

Data Sheet Issue:- A1

Provisional Data

Rectifier Diode

Types W5984T#360 and W5984T#400

Development Type No.: WX205T#400

Absolute Maximum Ratings

	VOLTAGE RATINGS	MAXIMUM LIMITS	UNITS
V_{RRM}	Repetitive peak reverse voltage, (note 1)	3600-4000	V
V_{RSM}	Non-repetitive peak reverse voltage, (note 1)	3700-4100	V

	OTHER RATINGS	MAXIMUM LIMITS	UNITS
$I_{F(AV)M}$	Maximum average forward current, T_{sink}=55°C, (note 2)	5984	A
$I_{F(AV)M}$	Maximum average forward current. T_{sink}=100°C, (note 2)	4230	A
$I_{F(AV)M}$	Maximum average forward current. T_{sink}=100°C, (note 3)	2290	A
$I_{F(RMS)M}$	Nominal RMS forward current, T_{sink}=25°C, (note 2)	10930	A
$I_{F(d.c.)}$	D.C. forward current, T_{sink}=25°C, (note 4)	9850	A
I_{FSM}	Peak non-repetitive surge t_p=10ms, V_{rm}=60%V_{RRM}, (note 5)	62.0	kA
I_{FSM2}	Peak non-repetitive surge t_p=10ms, V_{rm}≤10V, (note 5)	68.0	kA
I^2t	I^2t capacity for fusing t_p=10ms, V_{rm}=60%V_{RRM}, (note 5)	19.2×10^6	A^2s
I^2t	I^2t capacity for fusing t_p=10ms, V_{rm}≤10V, (note 5)	23.1×10^6	A^2s
$T_{j\,op}$	Operating temperature range	-40 to +160	°C
T_{stg}	Storage temperature range	-55 to +160	°C

Notes:-
1) De-rating factor of 0.13% per °C is applicable for T_j below 25°C.
2) Double side cooled, single phase; 50Hz, 180° half-sinewave.
3) Cathode side cooled, single phase; 50Hz, 180° half-sinewave.
4) Double side cooled.
5) Half-sinewave, 160°C T_j initial.

Characteristics

	PARAMETER	MIN.	TYP.	MAX.	TEST CONDITIONS (Note 1)	UNITS
V_{FM}	Maximum peak forward voltage	-	-	1.25	I_{FM}=5000A	V
V_{FM}	Maximum peak forward voltage	-	-	2.12	I_{FM}=15400A	V
V_{T0}	Threshold voltage	-	-	0.758	Valid from 2000A to 6000A	V
r_T	Slope resistance	-	-	0.097		mΩ
I_{RRM}	Peak reverse current	-	-	100	Rated V_{RRM}	mA
Q_{rr}	Recovered charge	-	10000	11200	I_{TM}=2000A, t_p=2000µs, di/dt=10A/µs, V_r=100V	µC
Q_{ra}	Recovered charge, 50% Chord	-	6700	-		µC
I_{rm}	Reverse recovery current	-	285	-		A
t_{rr}	Reverse recovery time, 50% chord	-	47	-		µs
R_{thJK}	Thermal resistance, junction to heatsink	-	-	0.008	Double side cooled	K/W
		-	-	0.013	Anode side cooled	K/W
		-	-	0.020	Cathode side cooled	K/W
F	Mounting force	60	-	70	Note 2	kN
W_t	Weight	-	1.15	-	Outline option TJ	Kg
		-	1.70	-	Outline option TE	

Notes:-
1) Unless otherwise indicated T_j=160°C.
2) For other clamp forces, please consult factory.

Notes on Ratings and Characteristics

1.0 Voltage Grade Table

Voltage Grade	V_{RRM} V	V_{RSM} V	V_R DC V
36	3600	3700	1880
40	4000	4100	2100

2.0 Extension of Voltage Grades

This report is applicable to other voltage grades when supply has been agreed by Sales/Production.

3.0 De-rating Factor

A blocking voltage de-rating factor of 0.13%/°C is applicable to this device for T_j below 25°C.

4.0 Snubber Components

When selecting snubber components, care must be taken not to use excessively large values of snubber capacitor or excessively small values of snubber resistor. Such excessive component values may lead to device damage due to the large resultant values of snubber discharge current. If required, please consult the factory for assistance.

5.0 Computer Modelling Parameters

5.1 Device Dissipation Calculations

$$I_{AV} = \frac{-V_{T0} + \sqrt{V_{T0}^{\,2} + 4 \cdot ff^2 \cdot r_T \cdot W_{AV}}}{2 \cdot ff^2 \cdot r_T}$$

and:

$$W_{AV} = \frac{\Delta T}{R_{th}}$$

$$\Delta T = T_{j\,\max} - T_K$$

Where V_{T0}=0.758V, r_T=0.097mΩ,

R_{th} = Supplementary thermal impedance, see table below and

ff = Form factor, see table below.

Supplementary Thermal Impedance				
Conduction Angle	6 phase (60°)	3 phase (120°)	½ wave (180°)	d.c.
Square wave Double Side Cooled	0.00866	0.00847	0.00832	0.00800
Square wave Cathode Side Cooled	0.02118	0.02101	0.02086	0.02000
Sine wave Double Side Cooled	0.00855	0.00837	0.00813	
Sine wave Cathode Side Cooled	0.02108	0.02091	0.02068	

Form Factors				
Conduction Angle	6 phase (60°)	3 phase (120°)	½ wave (180°)	d.c.
Square wave	2.449	1.732	1.414	1
Sine wave	2.778	1.879	1.57	

5.2 Calculating V_F using ABCD Coefficients

The on-state characteristic I_F vs. V_F, on page 6 is represented in two ways;

(i) the well established V_{T0} and r_T tangent used for rating purposes and

(ii) a set of constants A, B, C, D, forming the coefficients of the representative equation for V_F in terms of I_F given below:

$$V_F = A + B \cdot \ln(I_F) + C \cdot I_F + D \cdot \sqrt{I_F}$$

The constants, derived by curve fitting software, are given below for both hot and cold characteristics. The resulting values for V_F agree with the true device characteristic over a current range, which is limited to that plotted.

25°C Coefficients		160°C Coefficients	
A	1.701149	A	0.491657
B	-0.2152069	B	2.050974×10^{-3}
C	-8.51276×10^{-5}	C	2.33397×10^{-5}
D	0.02609856	D	8.878275×10^{-3}

5.3 D.C. Thermal Impedance Calculation

$$r_t = \sum_{p=1}^{p=n} r_p \cdot \left(1 - e^{\frac{-t}{\tau_p}}\right)$$

Where *p = 1* to *n, n* is the number of terms in the series and:

t = Duration of heating pulse in seconds.
r_t = Thermal resistance at time t.
r_p = Amplitude of p_{th} term.
τ_p = Time Constant of r_{th} term.

The coefficients for this device are shown in the tables below:

D.C. Double Side Cooled				
Term	1	2	3	4
r_p	3.81150×10^{-3}	1.89558×10^{-3}	1.71360×10^{-3}	5.24282×10^{-4}
τ_p	1.01434	0.34872	0.08992	0.01065

Term	1	2	3
r_p	0.01653	3.37618×10^{-3}	5.93598×10^{-4}
τ_p	5.31595	0.15120	0.01207

6.0 Reverse recovery ratings

(i) Q_{ra} is based on 50% I_{rm} chord as shown in Fig. 1

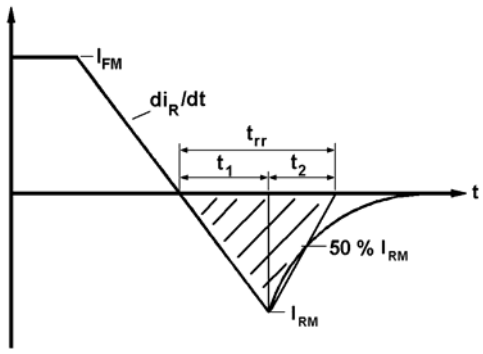

Fig. 1

(ii) Q_{rr} is based on a 150µs integration time i.e.

$$Q_{rr} = \int_0^{150\mu s} i_{rr}.dt$$

(iii)

$$K\ Factor = \frac{t_1}{t_2}$$

Curves

Figure 1 – Forward characteristics of Limit device

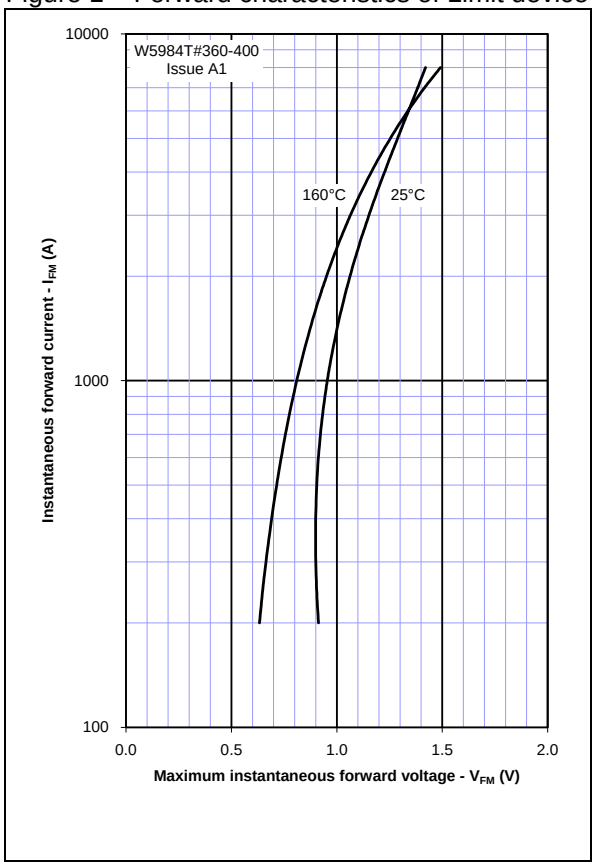

Figure 2 – Transient thermal impedance

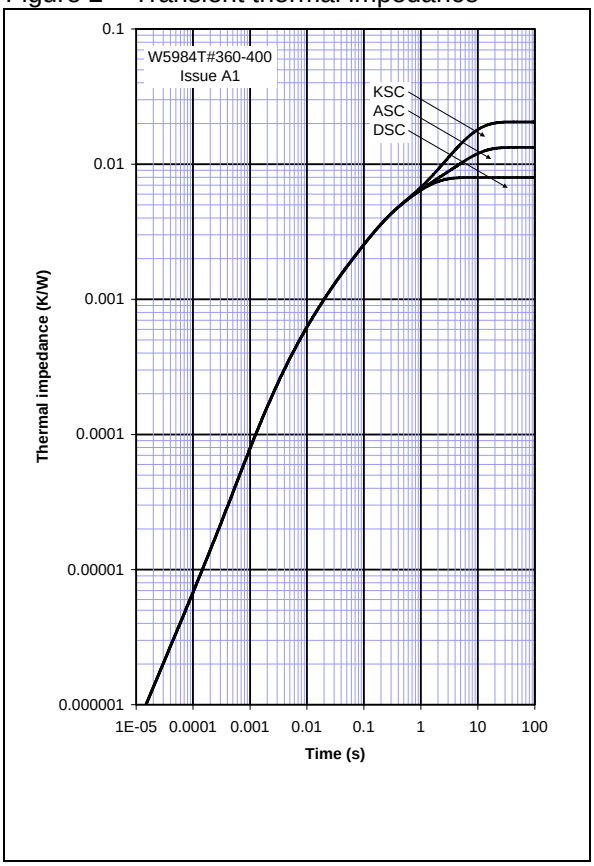

Figure 3 – Maximum Surge Rating

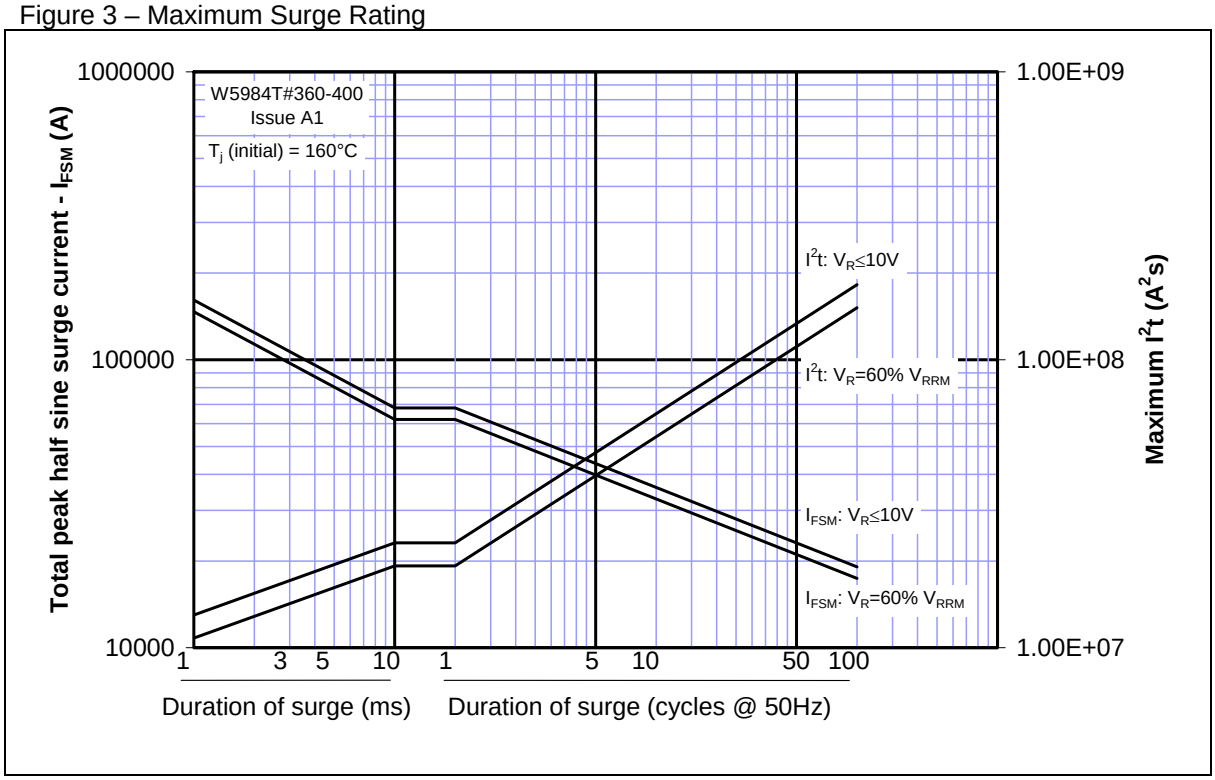

Figure 4 – Total recovered charge, Q_{rr}

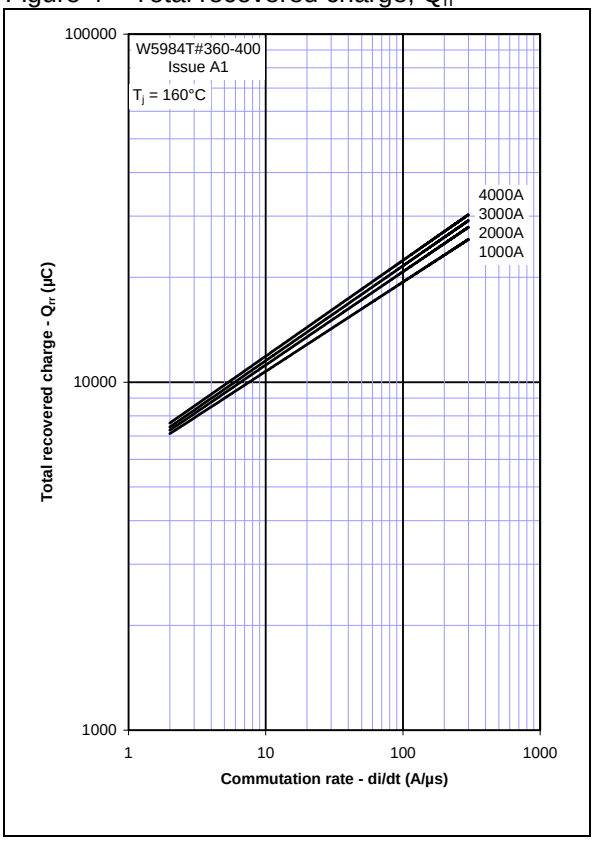

Figure 5 – Recovered charge, Q_{ra} (50% chord)

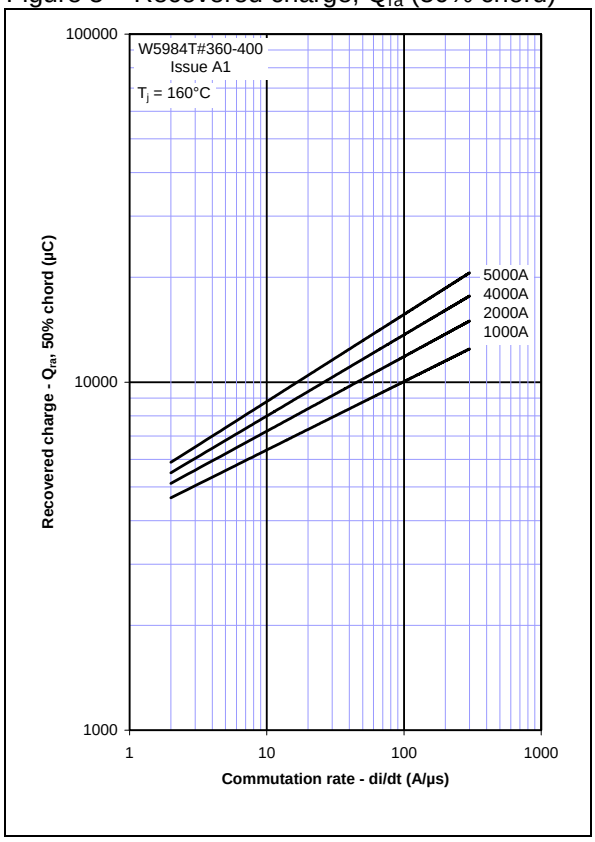

Figure 6 – Peak reverse recovery current, I_{rm}

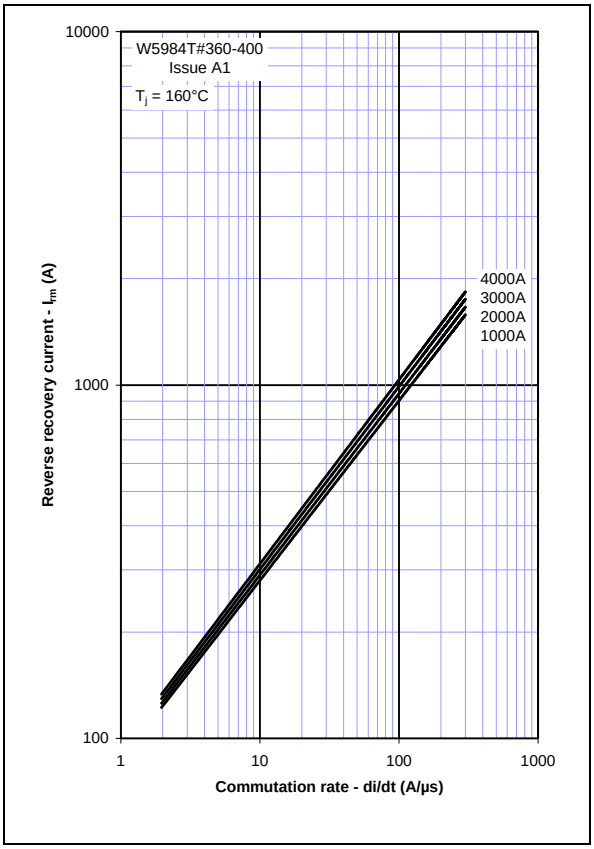

Figure 7 – Maximum recovery time, t_{rr} (50% chord)

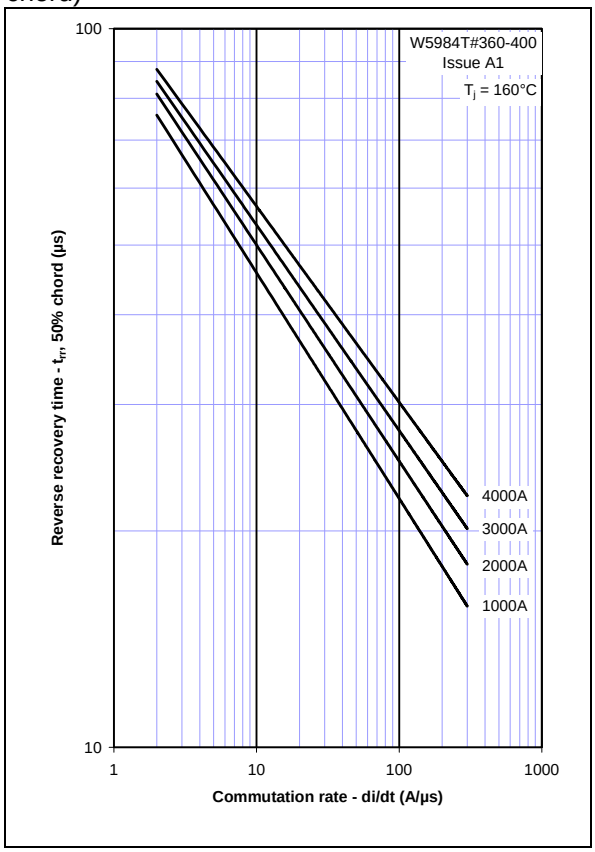

Figure 8 – Forward current vs. Power dissipation – Double Side Cooled

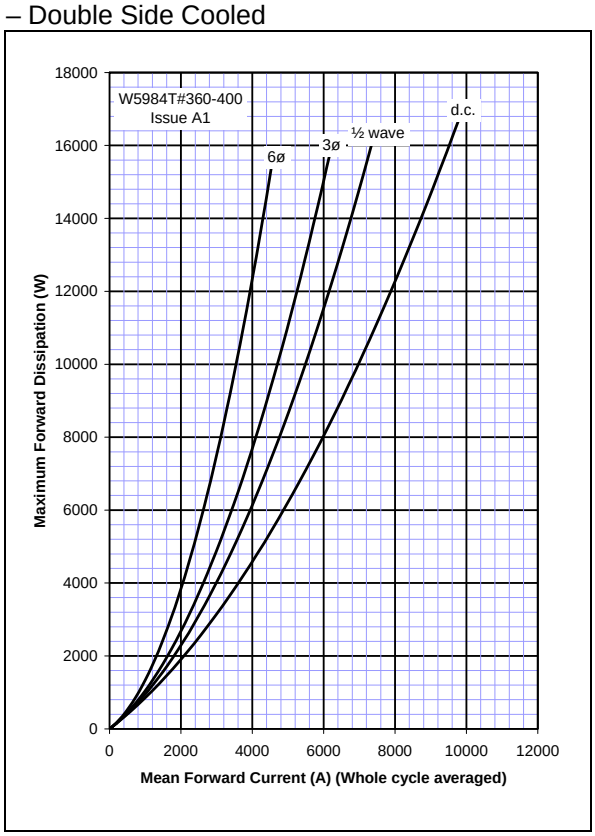

Figure 9 – Forward current vs. Heatsink temperature – Double Side Cooled

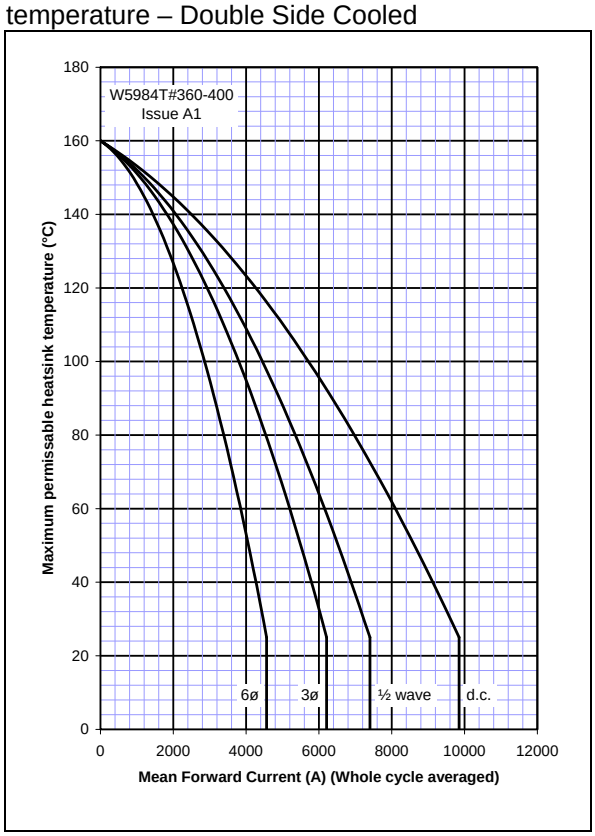

Figure 10 – Forward current vs. Power dissipation – Cathode Side Cooled

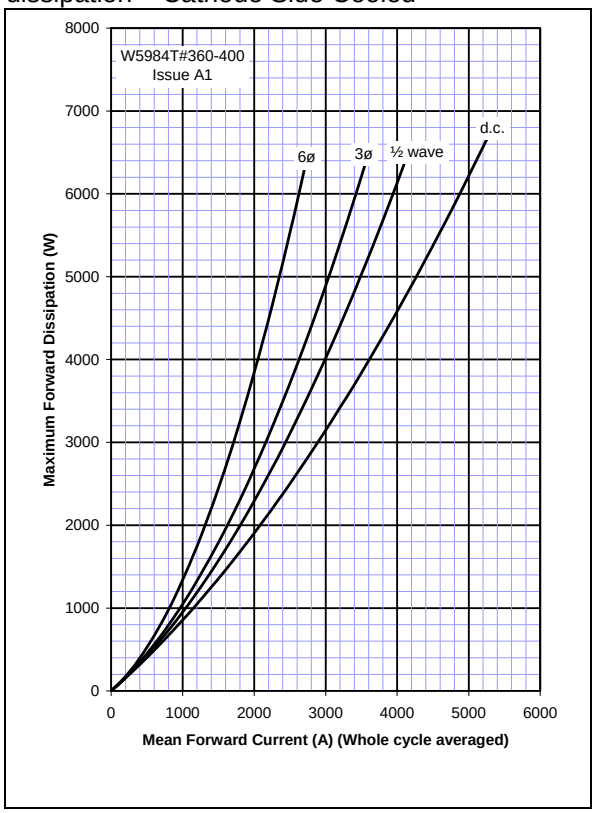

Figure 11 – Forward current vs. Heatsink temperature – Cathode Side Cooled

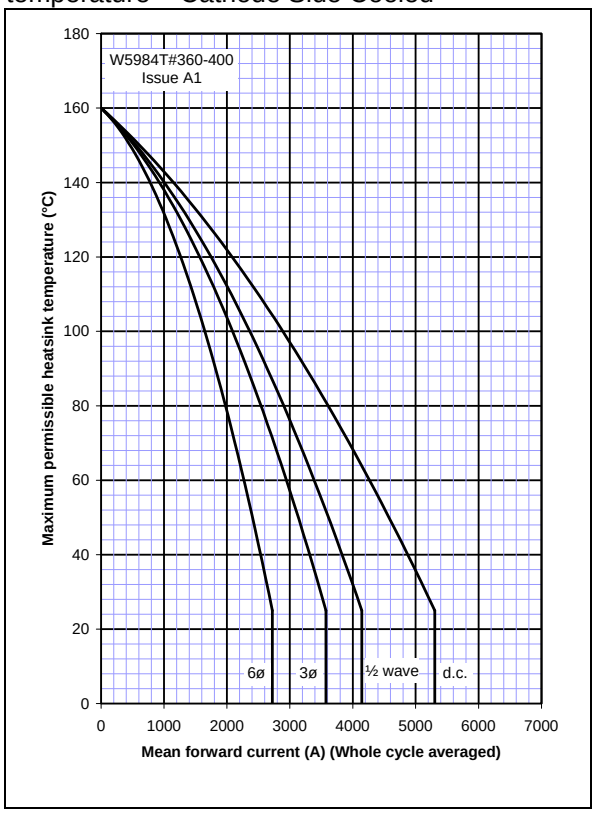

Outline Drawing & Ordering Information

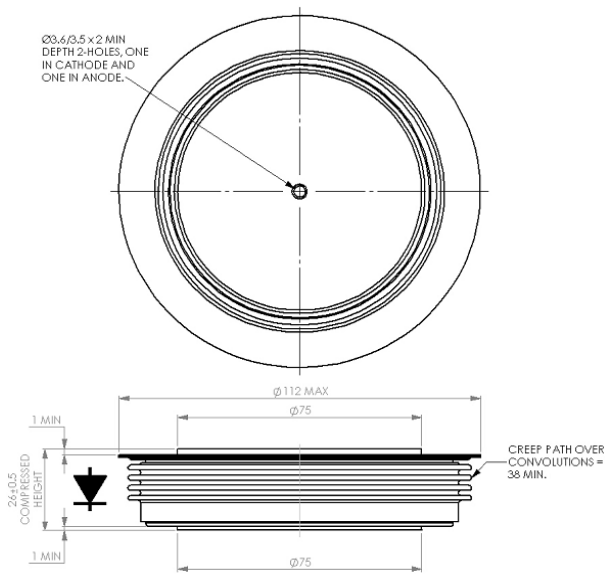

100A368

Outline option TJ

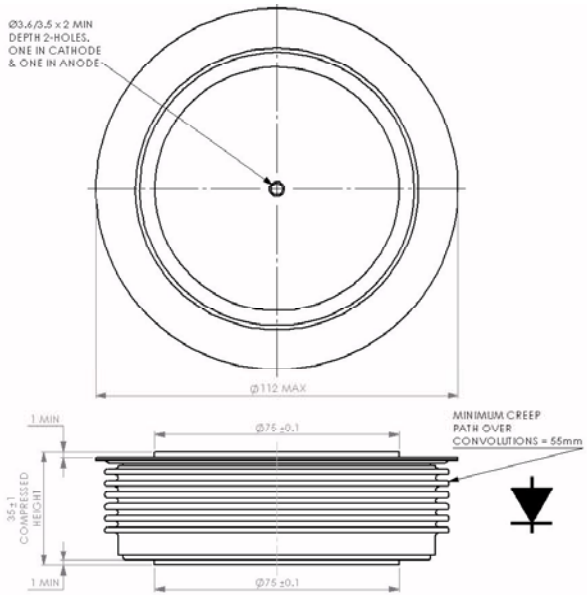

100A372

Outline option TE

ORDERING INFORMATION		(Please quote 10 digit code as below)	
W5984	**T#**	**♦♦**	**0**
Fixed Type Code	Outline Code TJ = 26mm Clamp height TE = 35mm Clamp height	Voltage code V_{RRM}/100 36 & 40	Fixed code

Order code: W5984T#400 – 4000V V_{RRM}, 26mm clamp height capsule.

IXYS Semiconductor GmbH
Edisonstraße 15
D-68623 Lampertheim
Tel: +49 6206 503-0
Fax: +49 6206 503-627
E-mail: marcom@ixys.de

IXYS UK Westcode Ltd
Langley Park Way, Langley Park,
Chippenham, Wiltshire, SN15 1GE.
Tel: +44 (0)1249 444524
Fax: +44 (0)1249 659448
E-mail: sales@ixysuk.com

IXYS Corporation
1590 Buckeye Drive
Milpitas CA 95035-7418
Tel: +1 (408) 457 9000
Fax: +1 (408) 496 0670
E-mail: sales@ixys.net

www.ixysuk.com

www.ixys.com

IXYS Long Beach
IXYS Long Beach, Inc
2500 Mira Mar Ave, Long Beach
CA 90815
Tel: +1 (562) 296 6584
Fax: +1 (562) 296 6585
E-mail: service@ixyslongbeach.com

The information contained herein is confidential and is protected by Copyright. The information may not be used or disclosed except with the written permission of and in the manner permitted by the proprietors IXYS UK Westcode Ltd.

© IXYS UK Westcode Ltd.

In the interest of product improvement, IXYS UK Westcode Ltd reserves the right to change specifications at any time without prior notice.

Devices with a suffix code (2-letter, 3-letter or letter/digit/letter combination) added to their generic code are not necessarily subject to the conditions and limits contained in this report.

IXYS
A Littelfuse Technology

Disclaimer Notice - Information furnished is believed to be accurate and reliable. However, users should independently evaluate the suitability of and test each product selected for their own applications. Littelfuse products are not designed for, and may not be used in, all applications. Read complete Disclaimer Notice at www.littelfuse.com/disclaimer-electronics.