Ultrafast Recovery Rectifier

DUR1040CT, 2x 5A, 400V, TO-220AB, Common Cathode

Littelfuse®
Expertise Applied | Answers Delivered

DUR1040CT

RoHS Pb e3

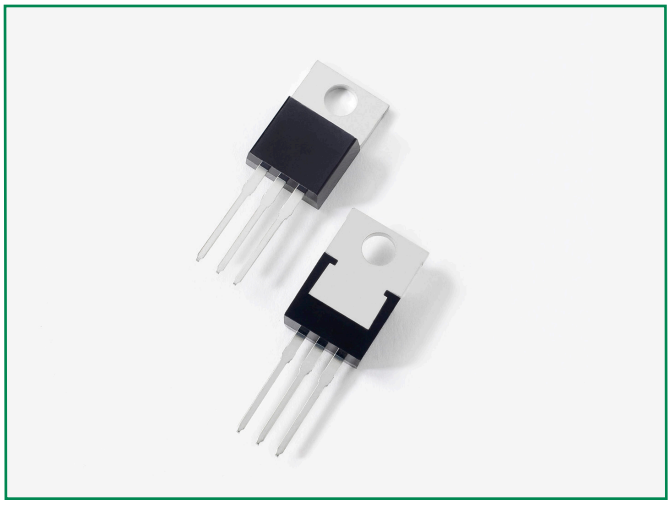

Description

Littelfuse DUR series Ultrafast Recovery Rectifier is designed to meet the general requirements of commercial applications by providing low Trr, high-temperature, low-leakage and low forward voltage drop products. It is suitable for output rectifier, free-wheeling or boost diode in high-frequency power switching application such as switch mode power supply and DC-DC converters.

Features

- Ultra-fast switching
- Low reverse leakage current
- High surge current capability
- Low forward voltage drop
- Common Cathode configuration in TO-220AB package
- Pb-free E3 means 2nd level interconnect is Pb-free and the terminal finish material is tin(Sn) (IPC/JEDEC J-STD-609A.01)

Circuit Diagram

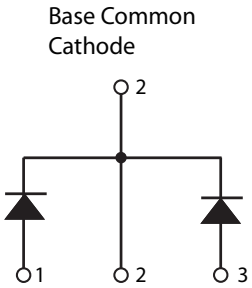

Applications

- Output rectifiers in switch mode power supplies (SMPS) and DC to DC converters
- Free-wheeling diode or boost diode in converters and motor control circuits
- Anti-parallel diode for high frequency switching devices such as IGBT
- Uninterruptible Power Supplies (UPS)
- Inductive heating and melting
- Ultrasonic cleaners and welders

Maximum Ratings

Characteristics	Symbol	Conditions	Max.	Unit
Peak Inverse Voltage	V_{RWM}	-	400	V
Average Forward Current	$I_{F(AV)}$	50% duty cycle @T_C =112 °C, rectangular wave form	5 (Per Leg)	A
			10 (Total Device)	
Peak One Cycle Non-Repetitive Surge Current (Per Leg)	I_{FSM}	8.3 ms, half sine pulse	80	A

Electrical Characteristics

Characteristics	Symbol	Conditions	Max.	Unit
Forward Voltage Drop (Per Leg)[1]	V_F	@5A, Pulse, T_J = 25 °C	1.3	V
Reverse Current[1]	I_{R1}	@V_R = Rated V_R, T_J = 25 °C	30	µA
	I_{R2}	@V_R = Rated V_R, T_J = 125 °C	300	
Reverse Recovery Time	t_{rr1}	I_F=500mA, I_R=1A,and I_{rm}=250mA	45	ns

Footnote [1]: Pulse Width < 300µs, Duty Cycle <2%

© 2015 Littelfuse, Inc.
Specifications are subject to change without notice.
Revised: 01/19/16

Thermal-Mechanical Specifications

Characteristics	Symbol	Conditions	Specification	Unit
Junction Temperature	T_J	-	-55 to +150	°C
Storage Temperature	T_{stg}	-	-55 to +150	°C
Typical Thermal Resistance Junction to Case	$R_{\theta JC}$	DC operation	3.5	°C/W
Approximate Weight	wt	-	2	g
Case Style	-	TO-220AB	-	-

Figure 1: Typical Forward Characteristics

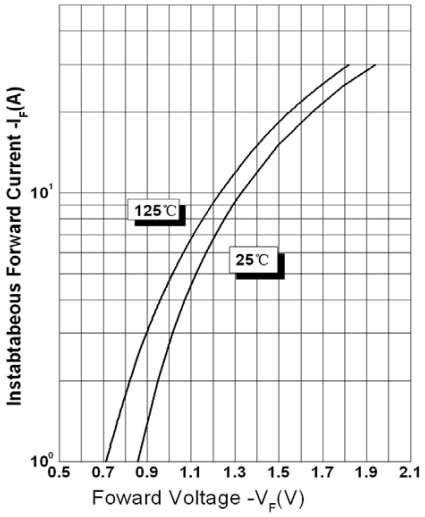

Figure 2: Typical Reverse Characteristics

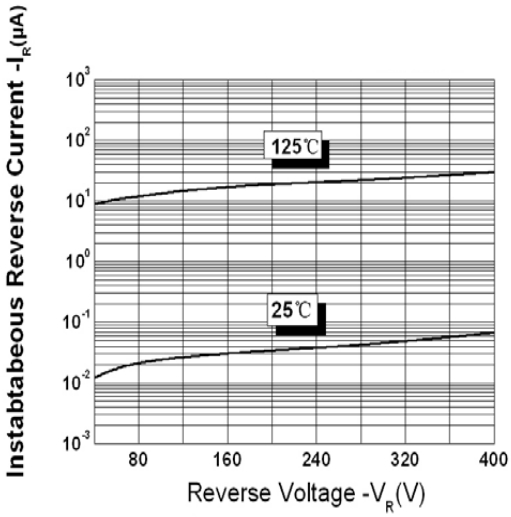

Figure 3: Typical Junction Capacitance

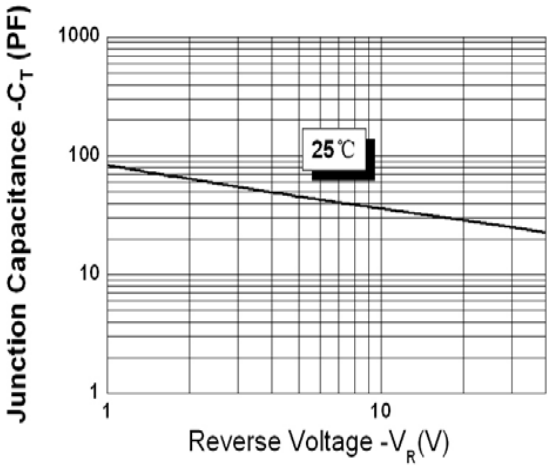

Part Numbering and Marking System

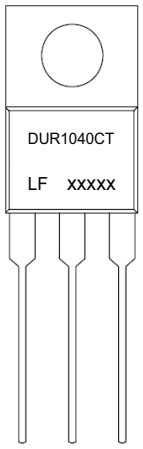

***xxxxx is YYWWL**

DUR	= Device Type
10	= Forward Current (10A)
40	= Reverse Voltage (400V)
CT	= Configuration
LF	= Littelfuse
YY	= Year
WW	= Week
L	= Lot Number

© 2015 Littelfuse, Inc.
Specifications are subject to change without notice.
Revised: 01/19/16

Packing Options

Part Number	Marking	Packing Mode	M.O.Q
DUR1040CT	DUR1040CT	50pcs / Tube	1000

Dimensions-Package TO-220AB

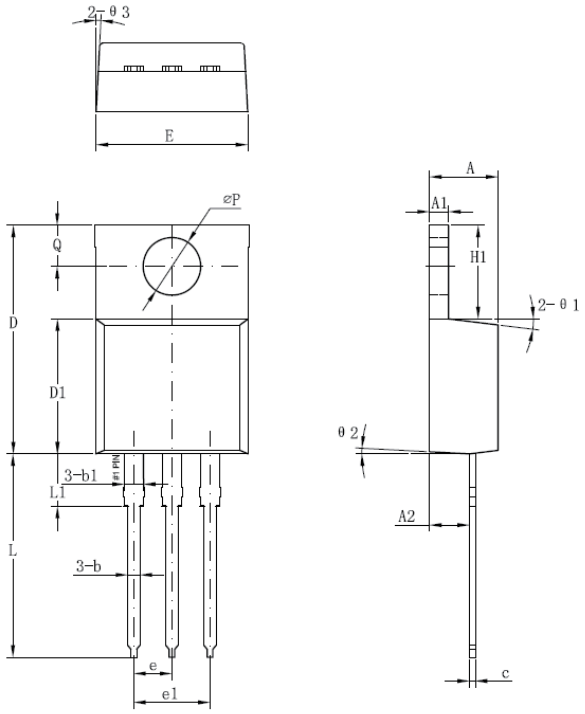

Symbol	Millimeters	
	Min	Max
A	3.56	4.83
A1	0.51	1.40
A2	2.03	2.92
b	0.38	1.02
b1	1.14	1.78
c	0.31*	0.61
D	14.22	16.51
D1	8.38	9.15*
E	9.65	10.67
e	2.54	-
e1	4.98*	-
H1	5.84	6.86
L	12.70	14.73
L1	-	6.35
ØP	3.53	4.09
Q	2.54	3.43

Footnote *: The spec. does not comply with JEDEC spec.

Tube Specification TO-220AB

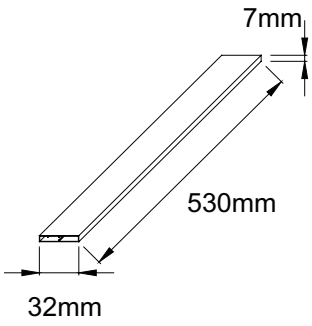

© 2015 Littelfuse, Inc.
Specifications are subject to change without notice.
Revised: 01/19/16