Littelfuse®
Expertise Applied | Answers Delivered

KRDI SERIES

Description

The KRDI Series is a compact time-delay relay measuring only 2 in. (50.8 mm) square. Its solid-state timing circuit provides excellent repeat accuracy and stability. Encapsulation protects against shock, vibration, and humidity. The KRDI Series is a cost effective approach for OEM applications that require small size, isolation, reliability, and long life.

Operation (Interval)

Upon application of input voltage, the time delay begins. The output relay energizes during the time delay. At the end of the time delay, the output de-energizes and remains de-energized until input voltage is removed.

Reset: Removing input voltage resets the time delay and the output.

Wiring Diagram

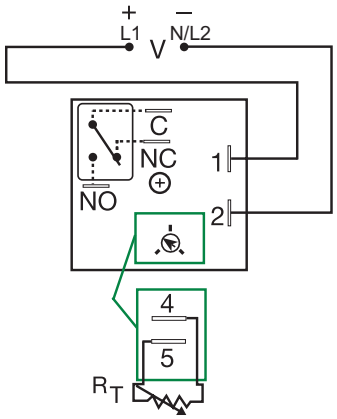

V = Voltage
C = Common, Transfer Contact
NO = Normally Open
NC = Normally Closed

A knob is supplied for adjustable units, or R_T terminals 4 & 5 for external adjust. See external adjustment vs time delay chart.

Relay contacts are isolated.

Features & Benefits

FEATURES	BENEFITS
Compact, low cost design measuring 2 in. (50.8mm) square	Allows flexiblility for OEM applications
Microcontroller based	Repeat Accuracy + / - 0.5%, Factory calibration + / - 5%
Isolated, 10A, SPDT output contacts	Allows control of loads for AC or DC voltages
Encapsulated	Protects against shock, vibration, and humidity

Accessories

P1004-95, P1004-95-X Versa-Pot
Panel mountable, industrial potentiometer recommended for remote time delay adjustment.

P1023-6 Mounting bracket
The 90° orientation of mounting slots makes installation/removal of modules quick and easy.

P0700-7 Versa-Knob
Designed for 0.25 in (6.35 mm) shaft of Versa-Pot. Semi-gloss industrial black finish.

P1015-13 (AWG 10/12), **P1015-64** (AWG 14/16) **Female Quick Connect**
These 0.25 in. (6.35 mm) female terminals are constructed with an insulator barrel to provide strain relief.

P1015-18 Quick Connect to Screw Adapter
Screw adapter terminal designed for use with all modules with 0.25 in. (6.35 mm) male quick connect terminals.

Ordering Information

MODEL	INPUT VOLTAGE	ADJUSTMENT	TIME DELAY
KRDI120	12VDC	Onboard knob	0.1 - 10s
KRDI121	12VDC	Onboard knob	1 - 100s
KRDI122	12VDC	Onboard knob	10 - 1000s
KRDI2110S	24VAC/VDC	Fixed	10s
KRDI2160S	24VAC/VDC	Fixed	60s
KRDI220	24VAC/VDC	Onboard knob	0.1 - 10s
KRDI320	24VDC	Onboard knob	0.1 - 10s
KRDI420	120VAC	Onboard knob	0.1 - 10s
KRDI424	120VAC	Onboard knob	1 - 100m

If you don't find the part you need, call us for a custom product 800-843-8848

© 2018 Littelfuse Protection Relays & Controls

KRDI SERIES

Accessories

C103PM (AL) DIN Rail
35 mm aluminum DIN rail available in a 36 in. (91.4 cm) length.

P1023-20 DIN Rail Adapter
Allows module to be mounted on a 35 mm DIN type rail with two #10 screws.

Specifications

Time Delay	
Range	0.1s - 100m in 5 adjustable ranges or fixed
Repeat Accuracy	±0.5% or 20ms, whichever is greater
Tolerance (Factory Calibration)	≤ ± 5%
Reset Time	≤ 150ms
Time Delay vs Temp. & Voltage	≤ ±5%
Input	
Voltage	12, 24 or 110VDC; 24, 120 or 230VAC
Tolerance	
12VDC & 24VDC/AC	-15% - 20%
110VDC, 120VAC or 230VAC	-20% - 10%
AC Line Frequency/DC Ripple	50/60 Hz / ≤ 10%
Power Consumption	AC ≤ 2VA; DC ≤ 2W
Output	
Type	Isolated relay contacts
Form	SPDT
Rating (at 40°C)	10A resistive @ 125VAC; 5A resistive @ 230VAC & 28VDC; 1/4 hp @ 125VAC
Max. Switching Voltage	250VAC
Life (Operations)	Mechanical - 1 x 10^7; Electrical - 1 x 10^5
Protection	
Circuitry	Encapsulated
Isolation Voltage	≥ 1500V RMS input to output
Insulation Resistance	≥ 100 MΩ
Polarity	DC units are reverse polarity protected
Mechanical	
Mounting	Surface mount with one #10 (M5 x 0.8) screw
Dimensions	**H** 50.8 mm (2”); **W** 50.8 mm (2”); **D** 30.7 mm (1.21”)
Termination	0.25 in. (6.35 mm) male quick connect terminals
Environmental	
Operating/Storage Temperature	-20° to 60°C / -40° to 85°C
Humidity	95% relative, non-condensing
Weight	≅ 2.6 oz (74 g)

External Resistance vs. Time Delay

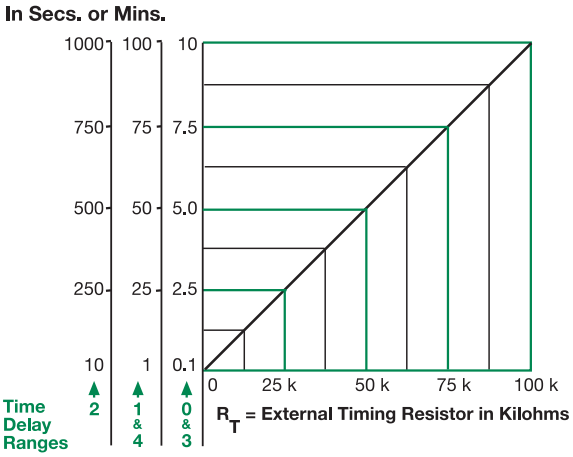

This chart applies to externally adjustable part numbers.
The time delay is adjustable over the time delay range selected by varying the resistance across the RT terminals; as the resistance increases the time delay increases.
When selecting an external RT, add the tolerances of the timer and the RT for the full time range adjustment.
Examples: 1 to 50 S adjustable time delay, select time delay range 1 and a 50 K ohm RT. For 1 to 100 S use a 100 K ohm RT.

Output Current/Ambient Temperature

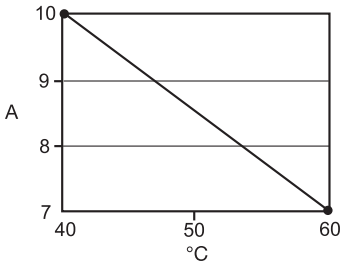

Function Diagram

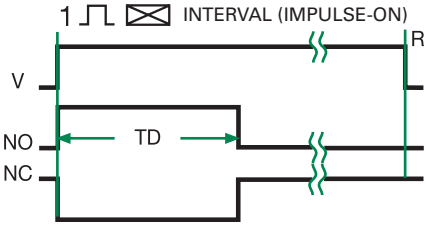

V = Voltage
NO = Normally Open Contact
NC = Normally Closed Contact
TD = Time Delay
R = Reset
= Undefined Time

Disclaimer Notice – Information furnished is believed to be accurate and reliable. However, users should independently evaluate the suitability of and test each product selected for their own applications. Littelfuse products are not designed for, and may not be used in, all applications. Read complete Disclaimer Notice at **www.littelfuse.com/product-disclaimer.**