Littelfuse®
Expertise Applied | Answers Delivered

SEALED IGNITION SWITCH WITH INTEGRATED CONNECTOR

Cole Hersee® A Littelfuse® Brand

c UL us

Description

An extensive series of ignition switches that can also be used as rotary switches. Suitable for a broad range of voltages: 10A at 12V, 5A at 24V, 3A at 36V and 2A at 48V DC. Made of rugged engineering grade plastic, these switches stand up to mechanical shock and vibration, and will not corrode or rust. This switch has an integrated Deutsch-type socket to make electrical connection quick and easy, and to exclude moisture and dust. UL-tested and recognized to SAE J259 for ignition switches. Contacts are sealed front and back to IP67 (with connector installed).

Many options available with regard to position, spring return, key boot style and marking, actuator interface and length, and anti-restart features.

Features and Benefits

- Engineering thermoplastic construction
- Fully sealed contact area using O-rings and ultrasonic welding
- Integrated Sealed Deutsch Connector Interface
- Anti-restart and spring return options available
- Tested to SAE J259 for ignition switches
- Supplied with two matching keys, with or without boot
- Custom logo can be molded on the boot
- Multiple key codes or keyed alike available
- Key is removable only at the 'Off' position

Specifications Overview

Contact Ratings:	10A @ 12V DC 5A @ 24V DC 3A @ 36V DC 2A @ 48V DC
Ingress Protection:	Contacts sealed front and back to IP67 (with connector installed)
Hardware:	Plastic facenut and nickel-plated brass backing nut

Web Resources

Download technical resources at: **littelfuse.com/95060**

Ordering Information

PART NUMBER	POSITIONS					SPRING RETURN**	WITH KEY BOOT	WITH ANTI-RESTART
95060 *	4	Acc	Off	Ign/Acc	Start	Yes	Yes	No
95060-01 *	4	Acc	Off	Ign/Acc	Start	Yes	Yes (CH Logo)	Yes
95060-03 *	3	—	Off	Ign/Acc	Start	Yes	Yes (CH Logo)	No
95060-04 *	3	—	Off	Ign/Acc	Start	Yes	Yes (CH Logo)	Yes
95060-07 *	2	—	—	Off	On	No	Yes (CH Logo)	No
95060-11	4	Acc	Off	Ign/Acc	Start	Yes	No	Yes
95060-21	3	—	Off	Ign/Acc	Start	Yes	Yes (CH Logo)	Yes
95060-23 *	4	Acc	Off	Ign/Acc	Start	Yes	Yes (CH Logo)	No
95060-24	4	Acc	Off	Ign/Acc	Start	Yes	Yes (CH Logo)	Yes
95060-26	3	—	Off	Ign/Acc	Start	Yes	Yes	No
95060-27	3	—	Off	On	On	No	Yes (CH Logo)	No
95060-33	4	Acc	Off	Ign/Acc	Start	Yes	No	Yes
95060-34 *	4	Acc	Off	Ign/Acc	Start	Yes	No	No
95060-36	3	—	Mom On	Off	Mom On	Yes (to Off)	No	No
95061-04 *	3	—	Off	Ign/Acc	Start	Yes	No (Lever)	Yes
95061-45	2	—	—	Off	On	No	No (Lever)	No
95061-47	4	GlowPlug	Off	Ign/Acc	Start	Yes	No (Lever)	Yes
95062-30	3	—	Off	Ign/Acc	Start	Yes	No (D-Shaft)	No
95060-50-BP	Same as 95060 with harness (Deutsch connector & wires)							
95060-60-BP	Same as 95060-03 with harness (Deutsch connector & wires)							

* Box and Retail Blister Pack Available
** Spring Return is to Ign/Acc Position

Datasheet Replaces Hotfeed Number D-613

© 2020 Littelfuse Commercial Vehicle Products
Rev: 031820-A

SEALED IGNITION SWITCH WITH INTEGRATED CONNECTOR

Switch Dimensions & Key Diagram

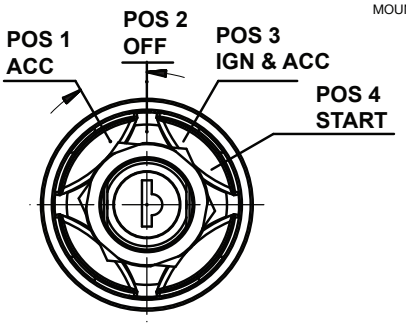

4-Position Model Shown

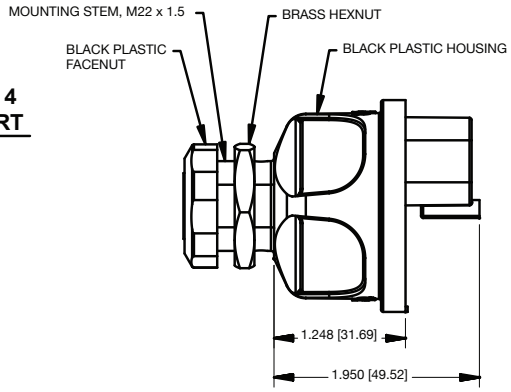

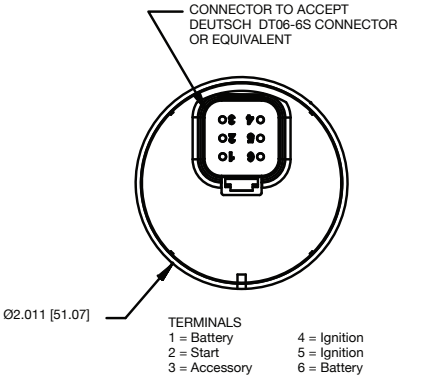

TERMINALS
1 = Battery
2 = Start
3 = Accessory
4 = Ignition
5 = Ignition
6 = Battery

Terminals 1 and 6 are connected internally.
Terminals 4 and 5 are connected internally.

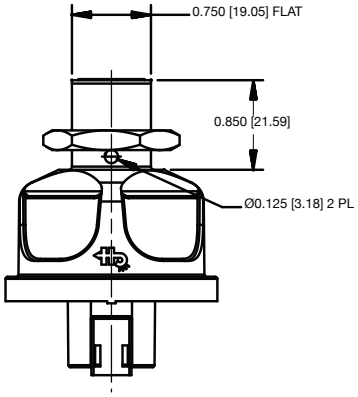

	BATTERY TERMINALS 1 & 6	START TERMINAL 2	ACCESSORY TERMINAL 3	IGNITION TERMINALS 4 & 5
Position 1	•		•	
Position 2	•			
Position 3	•		•	•
Position 4	•	•		•

With Key Boot

2 Double Bitted Booted
Keys Ringed, Black

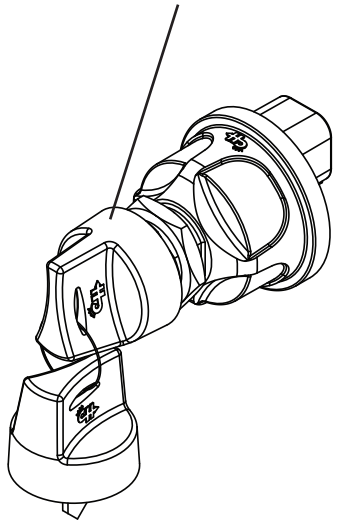

Without Key Boot

2 Double Bitted
Keys Ringed

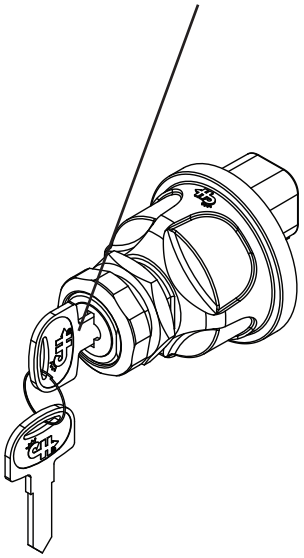

NEED KEYS FOR
95060 Series Switches

Key Code Ranges
600-799

CALL 800-255-1919

FUSES UNLIMITED
Authorized Key Distributor for 95060 Switches

Visit **Littelfuse.com** for the most up-to-date product information. Littelfuse products are designed for specific applications and should not be used for any purpose (including, without limitation, automotive applications) not expressly set forth in applicable Littelfuse product documentation. Warranties granted by Littelfuse shall be deemed void for products used for any purpose not expressly set forth in applicable Littelfuse product documentation. Littelfuse shall not be liable for any claims or damages arising out of products used in applications not expressly intended by Littelfuse as set forth in applicable Littelfuse product documentation.

© 2020 Littelfuse Commercial Vehicle Products

Rev: 031820-A