Neutral Grounding Resistor System

Description

High-resistance grounding prevents many of the problems that are associated with ungrounded and solidly grounded electrical distribution and utilization systems. High-resistance grounding can limit point-of-fault damage, eliminate transient overvoltages, reduce the arc-flash hazards, limit voltage exposure to personnel, and provide adequate tripping levels for selective current-based ground-fault detection and coordination.

The Littelfuse Neutral Grounding Resistor System is a neutral grounding resistor (NGR), current transformer, and sensing resistor installed in a NEMA 3R enclosure used to high-resistance ground transformers and generators. The NGR system is designed for use with Littelfuse Neutral Grounding Resistor Monitors for complete system grounding and grounding protection.

The NGR series – Canada systems are specifically designed for use in Canadian applications. For applications in the US and other parts of the world, please use the NGR series – US.

Applications

High-resistance grounding is applied on transformers and generators where safety and continuity of service are important. A faulted feeder may remain in operation until it is safe to repair the fault, where allowed by the local electrical code.

Features

Enclosure
The NGR Series - Canada comes pre-installed in a ventilated NEMA 3R galvanized steel enclosure and components are pre-wired to terminals for ease of installation. Back view shown on left.

ER Series Sensing Resistor
Use with the SE-330 to continuously monitor the continuity of a neutral-grounding resistor and eliminate hazardous voltage levels at the relay.

- ER-600VC is designed for use on systems up to 600 V for indoor applications. Available in optional moisture-proof enclosure (shown on left) for outdoor applications.

- ER-5KV for use on systems up to 4160 V for indoor applications.

- ER-5WP is designed for use on systems up to 4160 V and comes with weather-protected terminals for outdoor installations.

Earth-Fault Current Transformer
Used with the SE-330 to measure ac current flowing through the NGR for use with the continuity monitoring circuit and to detect ground faults.

- ELCT5-31 used with SE-330 for 5 A and 10 A NGRs.

- SE-CS10-2.5 used with SE-330 for 10 A and 15 A NGRs.
- 5SHT-101-E used with SE-330 for 25 A NGRs.

Benefits

- Eliminate phase-to-ground arc-flash incidents
- Eliminate transient overvoltages
- Reduce point-of-fault damage
- Can provide continuity of service during a ground fault
- Includes current transformer and ER series sensing resistor for use with Littelfuse monitoring relay and for ease of installation.

© 2019 Littelfuse, Inc.
Rev: 1-B-050420

Simplified Circuit Diagram with Littelfuse Neutral-Grounding-Resistor Monitor

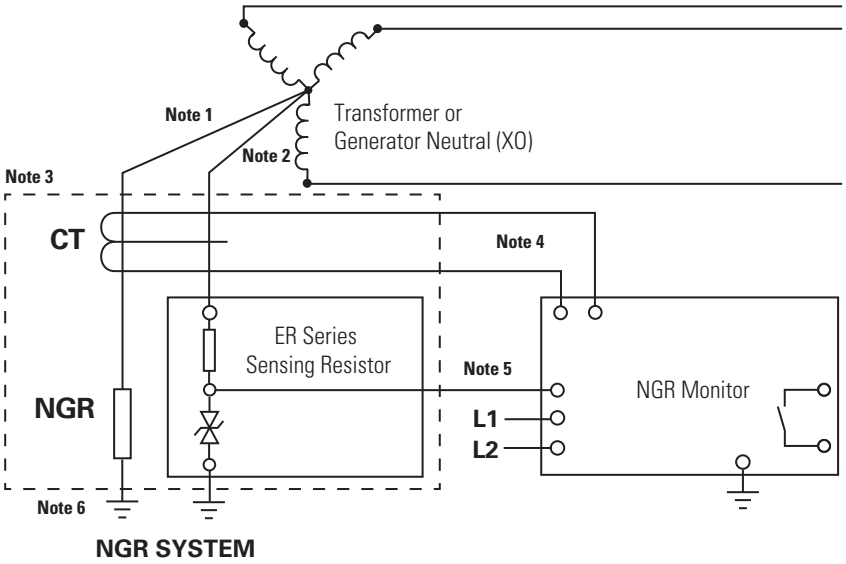

Note 1: Use minimum #8 AWG white or grey conductor insulated to system voltage to connect NGR to neutral.
Note 2: Use conductor insulated to system voltage (#14 AWG is typically used) and a separate lug at the X0 point to connect ER Series Sensing Resistor to neutral.
Note 3: Locate NGR system near transformer or generator.
Note 4: Two-conductor twisted cable required, shielded recommended.
Note 5: Voltage between ER Series Sensing Resistor terminals R and G is limited to 100 V by internal clamp.
Note 6: Use minimum #8 AWG green or bare conductor to connect NGR to ground.

© 2019 Littelfuse, Inc.

Ordering Information

PART NUMBER	LINE-LINE VOLTAGE (V)	LET-THROUGH CURRENT (A)	IMPEDANCE (OHMS)	TIME RATING	CURRENT TRANSFOMER	CT PRIMARY RATING (A)	CT SECONDARY RATING (A)	SENSING RESISTOR	ENCLOSURE
NGR1050	480	2	138	Continuous	ELCT5-31	5*	0.05	ER-600VC	NEMA 3R
NGR1041	480	2	138	Continuous	ELCT5-31	5*	0.05	ER-600VC	NEMA 3R; Weather Protected Sensing Resistor
NGR1036	480	5	55.4	Continuous	ELCT5-31	5*	0.05	ER-600VC	NEMA 3R
NGR1051	480	5	55.4	Continuous	ELCT5-31	5*	0.05	ER-600VC	NEMA 3R; Weather Protected Sensing Resistor
NGR1052	600	2	173.5	Continuous	ELCT5-31	5*	0.05	ER-600VC	NEMA 3R
NGR1053	600	2	173.5	Continuous	ELCT5-31	5*	0.05	ER-600VC	NEMA 3R; Weather Protected Sensing Resistor
NGR1038	600	5	69.4	Continuous	ELCT5-31	5*	0.05	ER-600VC	NEMA 3R
NGR1045	600	5	69.4	Continuous	ELCT5-31	5*	0.05	ER-600VC	NEMA 3R; Weather Protected Sensing Resistor
NGR1066	4160	5	480.9	10 s	ELCT5-31	5*	0.05	ER-600VC	NEMA 3R
NGR1067	4160	5	480.9	10 s	ELCT5-31	5*	0.05	ER-5KV	NEMA 3R; Weather Protected Sensing Resistor
NGR1068	4160	5	480.9	Continuous	ELCT5-31	5*	0.05	ER-5WP	NEMA 3R
NGR1069	4160	5	480.9	Continuous	ELCT5-31	5*	0.05	ER-5WP	NEMA 3R; Weather Protected Sensing Resistor
NGR1070	4160	10	240.5	10 s	SE-CS10-2.5	10*	0.05	ER-5KV	NEMA 3R
NGR1071	4160	10	240.5	10 s	SE-CS10-2.5	10*	0.05	ER-5WP	NEMA 3R; Weather Protected Sensing Resistor
NGR1072	4160	10	240.5	Continuous	SE-CS10-2.5	10*	0.05	ER-5KV	NEMA 3R
NGR1073	4160	10	240.5	Continuous	SE-CS10-2.5	10*	0.05	ER-5WP	NEMA 3R; Weather Protected Sensing Resistor
NGR1074	4160	15	160.3	10 s	SE-CS10-2.5	10*	0.05	ER-5KV	NEMA 3R
NGR1075	4160	15	160.3	10 s	SE-CS10-2.5	10*	0.05	ER-5WP	NEMA 3R; Weather Protected Sensing Resistor
NGR1076	4160	15	160.3	Continuous	SE-CS10-2.5	10*	0.05	ER-5KV	NEMA 3R
NGR1077	4160	15	160.3	Continuous	SE-CS10-2.5	10*	0.05	ER-5WP	NEMA 3R; Weather Protected Sensing Resistor
NGR1078	4160	25	96.2	10 s	5SHT-101-E	20**	1	ER-5KV	NEMA 3R
NGR1079	4160	25	96.2	10 s	5SHT-101-E	20**	1	ER-5WP	NEMA 3R; Weather Protected Sensing Resistor
NGR1080	4160	25	96.2	Continuous	5SHT-101-E	20**	1	ER-5KV	NEMA 3R
NGR1081	4160	25	96.2	Continuous	5SHT-101-E	20**	1	ER-5WP	NEMA 3R; Weather Protected Sensing Resistor

* Connect to SE-330 terminals 8 and 11
** Connect to SE-330 terminals 9 and 11

© 2019 Littelfuse, Inc.

Dimensions and Mounting Diagrams

For 480 V NGR Systems:

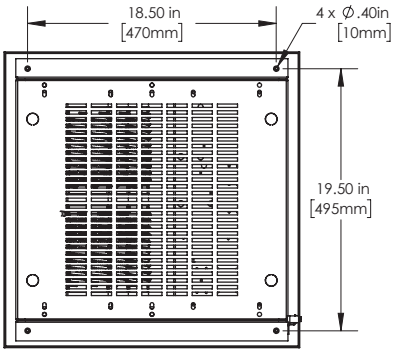

BOTTOM VIEW
(MOUNTING DIMENSIONS)

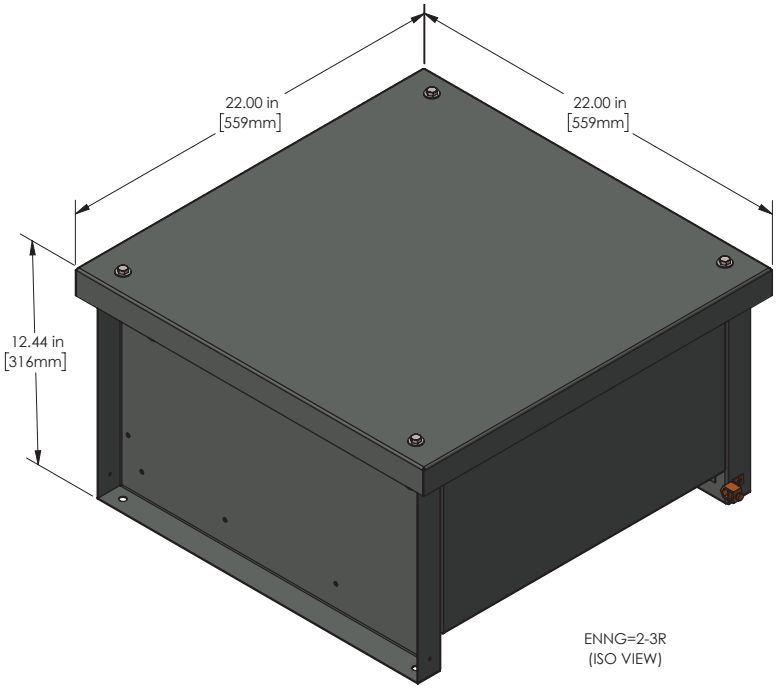

ENNG=2-3R
(ISO VIEW)

For 600 V NGR Systems:

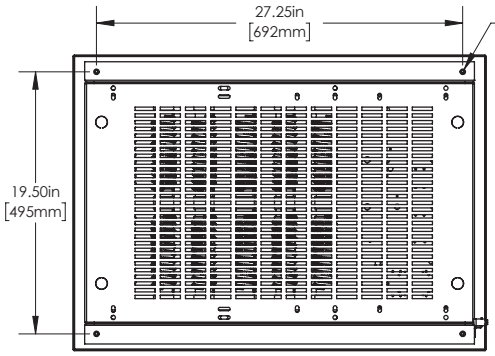

BOTTOM VIEW
(MOUNTING DIMENSIONS)

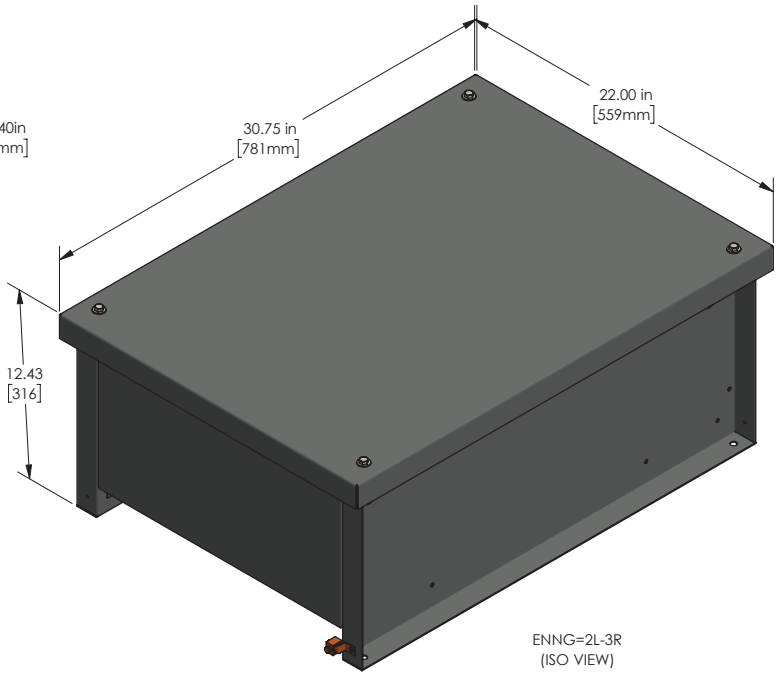

ENNG=2L-3R
(ISO VIEW)

© 2019 Littelfuse, Inc.

Specifications: 480 V NGR Systems

Voltage	480 V line-to-line, 277 V line-to-neutral
Let-Through Current	2 A or 5 A
Resistance	138.5 Ω (2 A) or 55.4 Ω (5 A)
Tolerance	+/- 10 % resistance
Duty Cycle	Continuous rated
Current Transformer	**ELCT5-31:** For use with SE-330 NGR Monitor Turns Ratio: 100:1 Current Rating: 5:0.05 A Primary Rating with SE-330: 5 A when connected to terminals 8 and 11 GF Trip Range: 100 mA to 5 A Window Diameter: 31 mm (1.22")
Sensing Resistor	ER-600VC; Optional installation in NEMA 4 enclosure for outdoor applications
Insulation Level	11 KV BIL
Temperature Rise	385 °C (725 °F)
Resistor Type	Stainless steel wire wound
Dimensions	**H** 324 mm (12.75"); **W** 558 mm (22.00"); **D** 558 mm (22.00")
Weight	23 kg (50 lbs)
Altitude	0–2000 masl
Enclosure Style	NEMA 3R, galvanized steel
Finish	Powder coated
Color	ANSI 61 grey
Mounting	Floor mount
Siesmic Bracing	Included
Approvals	cULus
Warranty	12 months in service or 18 months from the date of shipment whichever occurs first

Specifications: 600 V NGR Systems

Voltage	600 V line-to-line, 347 V line-to-neutral
Let-Through Current	2 A or 5 A
Resistance	174 Ω (2 A) or 69 Ω (5 A)
Tolerance	+/- 10 % resistance
Duty Cycle	Continuous rated
Frequency	50–60 Hz
Current Transformer	**ELCT5-31:** For use with SE-330 NGR Monitor Turns Ratio: 100:1 Current Rating: 5:0.05 A Primary Rating with SE-330: 5 A when connected to terminals 8 and 11 GF Trip Range: 100 mA to 5 A Window Diameter: 31 mm (1.22")
Sensing Resistor	ER-600VC; Optional installation in NEMA 4 enclosure for outdoor applications
Insulation Level	11 KV BIL
Temperature Rise	385 °C (725 °F)
Resistor Type	Stainless steel wire wound
Dimensions	**H** 324 mm (12.75"); **W** 558 mm (22.00"); **D** 558 mm (22.00")
Weight	23 kg (50 lbs)
Altitude	0–2000 masl
Enclosure Style	NEMA 3R, galvanized steel
Finish	Powder coated
Color	ANSI 61 grey
Mounting	Floor mount
Siesmic Bracing	Included
Approvals	cULus
Warranty	12 months in service or 18 months from the date of shipment whichever occurs first

© 2019 Littelfuse, Inc.

Specifications: 4160 V NGR Systems

Voltage	4160 V line-to-line, 2400 V line-to-neutral
Let-Through Current	5 A, 10 A, 15 A, or 25 A
Resistance	480 Ω (5 A), 240 Ω (10 A), 160 Ω (15 A), or 96 Ω (25 A)
Tolerance	+/- 10 % resistance
Duty Cycle	Continuous-duty or 10-second-duty rating
Frequency	50-60 Hz
Current Transformer	**ELCT5-31:** For use with SE-330 NGR Monitor Turns Ratio: 100:1 Current Rating: 5:0.05 A Primary Rating with SE-330: 5 A when connected to terminals 8 and 11 GF Trip Range: 100 mA to 5 A Window Diameter: 31 mm (1.22") **SE-CS10-2.5:** For use with SE-330 NGR Monitor Turns Ratio: 200:1 Current Rating: 12.5:0.0625 A Primary Rating with SE-330: 10 A when connected to terminals 8 and 11 GF Trip Range: 200 mA to 10 A Window Diameter: 63.5 mm (2.5") Turns Ratio: 100:5 Current Rating: 100:5 A Primary Rating with SE-330: 20 A when connected to terminals 9 and 11 GF Trip Range: 400 mA to 20 A Window Diameter: 40 mm (1.56")
Sensing Resistor	ER-5KV Optional ER-5WP for outdoor applications
Insulation Level	75 KV BIL
Temperature Rise	Continuous-duty rated: 385 °C (725 °F) 10-second-duty rated: 760 °C (1400 °F)
Resistor Type	Stainless Steel Wire Wound
Weights and Dimensions	
5 A, continuous-duty rated:	**H** 1226 mm (48.28"); **W** 1143 mm (45.00"); **D** 940 mm (37.00"); 192 kg (424 lbs)
10 A, continuous-duty rated:	**H** 1214 mm (47.78"); **W** 1270 mm (50.00"); **D** 1143 mm (45.00"); 235 kg (519 lbs)
15 A, continuous-duty rated:	**H** 1214 mm (47.78"); **W** 1270 mm (50.00"); **D** 1143 mm (45.00"); 258 kg (568 lbs)
25 A, continuous-duty rated:	**H** 1283 mm (50.50"); **W** 1575 mm (62.00"); **D** 1143 mm (45.00"); 320 kg (705 lbs)
5 A, 10-second-duty rated:	**H** 749 mm (29.50"); **W** 1143 mm (45.00"); **D** 940 mm (37.00"); 136 kg (300 lbs)
10 A, 10-second-duty rated:	**H** 749 mm (29.50"); **W** 1143 mm (45.00"); **D** 940 mm (37.00"); 136 kg (300 lbs)
15 A, 10-second-duty rated:	**H** 749 mm (29.50"); **W** 1143 mm (45.00"); **D** 940 mm (37.00"); 136 kg (300 lbs)
25 A, 10-second-duty rated:	**H** 749 mm (29.50"); **W** 1143 mm (45.00"); **D** 940 mm (37.00"); 136 kg (300 lbs)
Altitude	0-1000 masl
Enclosure Style	NEMA 3R, galvanized steel
Finish	Powder coated
Color	ANSI 61 grey
Mounting	Floor mount
Siesmic Bracing	Included
Approvals	cULus
Warranty	12 months in service or 18 months from the date of shipment, whichever occurs first

Accessories

SE-330 Neutral Grounding Resistor Monitor
Advanced ground-fault and neutral-grounding resistor monitoring relay that measures neutral current, neutral-to-ground voltage, and neutral-to-ground resistance.

NGRM-ENC Enclosed Neutral Grounding Resistor (NGR) Monitor
Type 4X enclosure housing a Littelfuse Startco SE-330 Neutral Grounding Resistor Monitor and optional accessories that include a 480/600 V control power transformer (CPT), faulted-phase indication (FPI; implemented with an EL3100 Ground-Fault & Phase-Voltage Indicator), earth-leakage panel meter, pulse-enable control, and mounting options. Appropriate fusing is included and field wiring is to terminal blocks.

Custom NGR Systems

Additional custom NGR systems are also available from Littelfuse. For NGR systems not listed on this sheet please contact Littelfuse by emailing **NGRquotes@Littelfuse.com**

Disclaimer Notice – Information furnished is believed to be accurate and reliable. However, users should independently evaluate the suitability of and test each product selected for their own applications. Littelfuse products are not designed for, and may not be used in, all applications. Read complete Disclaimer Notice at **www.littelfuse.com/product-disclaimer.**

© 2019 Littelfuse, Inc.
Rev: 1-B-050420