IXYS

Polar™ Power MOSFET

IXTU1R4N60P
IXTY1R4N60P
IXTP1R4N60P

V_{DSS} = 600V
I_{D25} = 1.4A
$R_{DS(on)}$ ≤ 9Ω

N-Channel Enhancement Mode
Avalanche Rated

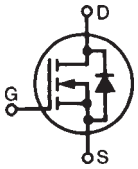

TO-251 (IXTU)

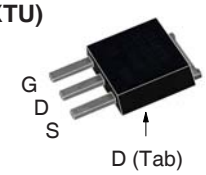

TO-252 (IXTY)

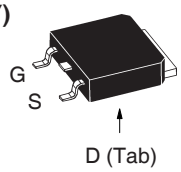

TO-220 (IXTP)

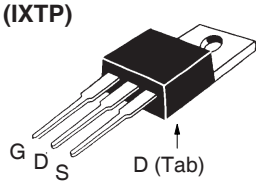

G = Gate D = Drain
S = Source Tab = Drain

Symbol	Test Conditions	Maximum Ratings	
V_{DSS}	T_J = 25°C to 150°C	600	V
V_{DGR}	T_J = 25°C to 150°C, R_{GS} = 1MΩ	600	V
V_{GSS}	Continuous	±30	V
V_{GSM}	Transient	±40	V
I_{D25}	T_C = 25°C	1.4	A
I_{DM}	T_C = 25°C, Pulse Width Limited by T_{JM}	2.1	A
I_A	T_C = 25°C	1.4	A
E_{AS}	T_C = 25°C	75	mJ
dv/dt	$I_S \le I_{DM}$, $V_{DD} \le V_{DSS}$, $T_J \le$ 150°C	10	V/ns
P_D	T_C = 25°C	50	W
T_J		-55 ... +150	°C
T_{JM}		150	°C
T_{stg}		-55 ... +150	°C
T_L	Maximum Lead Temperature for Soldering	300	°C
T_{SOLD}	1.6 mm (0.062in.) from Case for 10s	260	°C
M_d	Mounting Torque (TO-220)	1.13 / 10	Nm/lb.in
Weight	TO-251	0.40	g
	TO-252	0.35	g
	TO-220	3.00	g

Symbol	Test Conditions (T_J = 25°C, Unless Otherwise Specified)	Characteristic Values Min.	Typ.	Max.	
BV_{DSS}	V_{GS} = 0V, I_D = 25μA	600			V
$V_{GS(th)}$	V_{DS} = V_{GS}, I_D = 25μA	3.0		5.5	V
I_{GSS}	V_{GS} = ±30V, V_{DS} = 0V			±50	nA
I_{DSS}	V_{DS} = V_{DSS}, V_{GS} = 0V			1	μA
	T_J = 125°C			20	μA
$R_{DS(on)}$	V_{GS} = 10V, I_D = 0.5 • I_{D25}, Note 1			9	Ω

Features

- International Standard Packages
- Low Q_G
- Avalanche Rated
- Low Package Inductance
- Fast Intrinsic Rectifier

Advantages

- High Power Density
- Easy to Mount
- Space Savings

Applications

- DC-DC Converters
- Switch-Mode and Resonant-Mode Power Supplies
- AC and DC Motor Drives
- Discharge Circiuts in Lasers, Spark Igniters, RF Generators
- High Voltage Pulse Power Applications

© 2017 IXYS CORPORATION, All Rights Reserved

Symbol	Test Conditions (T_J = 25°C, Unless Otherwise Specified)	Characteristic Values Min.	Typ.	Max	
g_{fs}	V_{DS} = 20V, I_D = 0.5 • I_{D25}, Note 1	0.7	1.1		S
C_{iss}	V_{GS} = 0V, V_{DS} = 25V, f = 1MHz		140		pF
C_{oss}			17		pF
C_{rss}			2.4		pF
$Q_{g(on)}$	V_{GS} = 10V, V_{DS} = 0.5 • V_{DSS}, I_D = 0.5 • I_{D25}		5.2		nC
Q_{gs}			1.3		nC
Q_{gd}			5.2		nC
$t_{d(on)}$	**Resistive Switching Times** V_{GS} = 10V, V_{DS} = 0.5 • V_{DSS}, I_D = 0.5 • I_{D25} R_G = 50Ω (External)		10		ns
t_r			16		ns
$t_{d(off)}$			25		ns
t_f			16		ns
R_{thJC}				2.5	°C/W
R_{thCS}	TO-220		0.50		°C/W

Source-Drain Diode

Symbol	Test Conditions (T_J = 25°C, Unless Otherwise Specified)	Characteristic Values Min.	Typ.	Max	
I_S	V_{GS} = 0V			1.4	A
I_{SM}	Repetitive, Pulse Width Limited by T_{JM}			4.0	A
V_{SD}	I_F = I_S, V_{GS} = 0V, Note 1			1.5	V
t_{rr}	I_F = 1.4A, -di/dt = 100A/μs, V_R = 100V		500		ns

Note 1. Pulse test, t ≤ 300μs, duty cycle, d ≤ 2%.

IXYS Reserves the Right to Change Limits, Test Conditions, and Dimensions.

IXYS MOSFETs and IGBTs are covered by one or more of the following U.S. patents: 4,835,592 4,931,844 5,049,961 5,237,481 6,162,665 6,404,065B1 6,683,344 6,727,585 7,005,734B2 7,157,338B2 4,860,072 5,017,508 5,063,307 5,381,025 6,259,123B1 6,534,343 6,710,405B2 6,759,692 7,063,975B2 4,881,106 5,034,796 5,187,117 5,486,715 6,306,728B1 6,583,505 6,710,463 6,771,478B2 7,071,537

Fig. 1. Output Characteristics @ T_J = 25°C

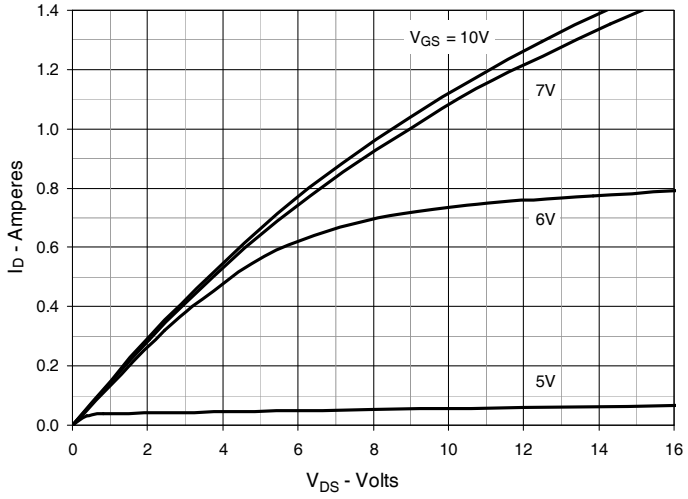

Fig. 2. Extended Output Characteristics @ T_J = 25°C

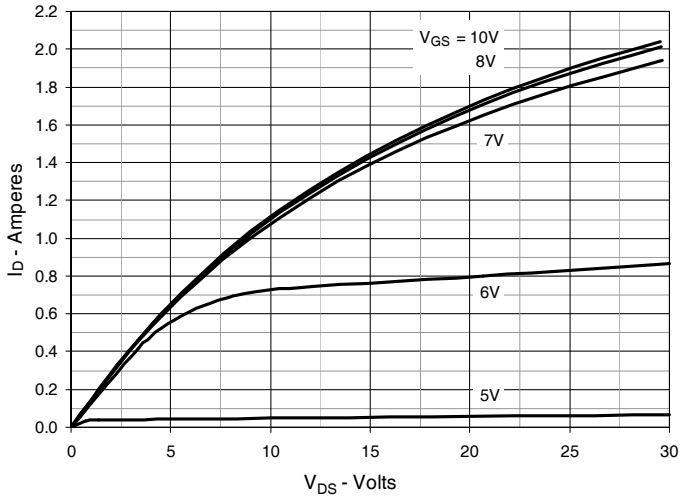

Fig. 3. Output Characteristics @ T_J = 125°C

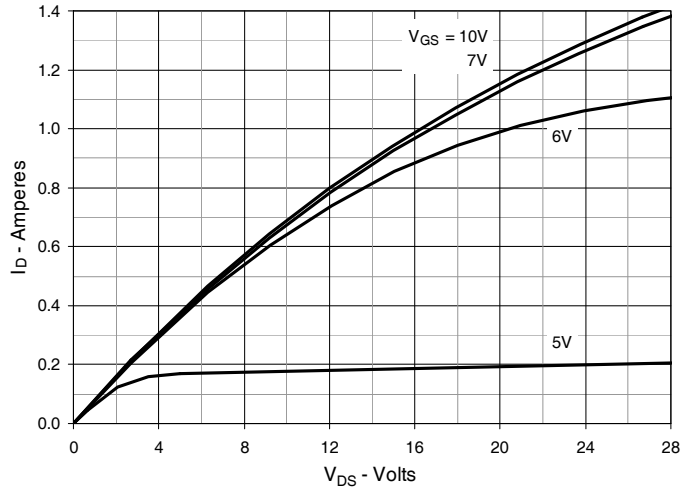

Fig. 4. $R_{DS(on)}$ Normalized to I_D = 0.7A Value vs. Junction Temperature

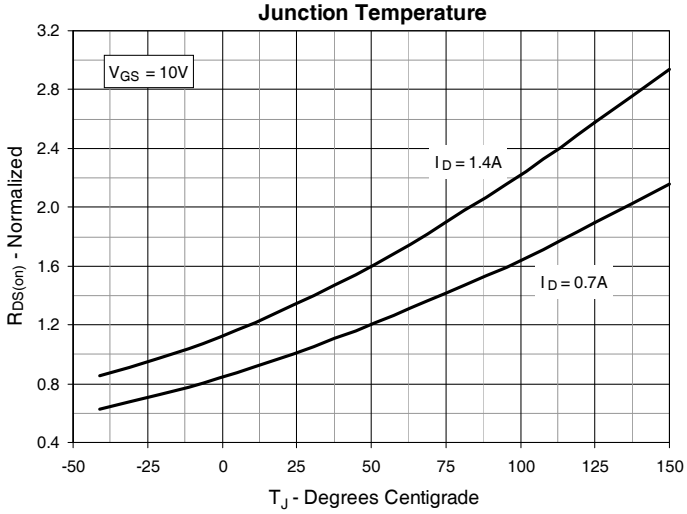

Fig. 5. $R_{DS(on)}$ Normalized to I_D = 0.7A Value vs. Drain Current

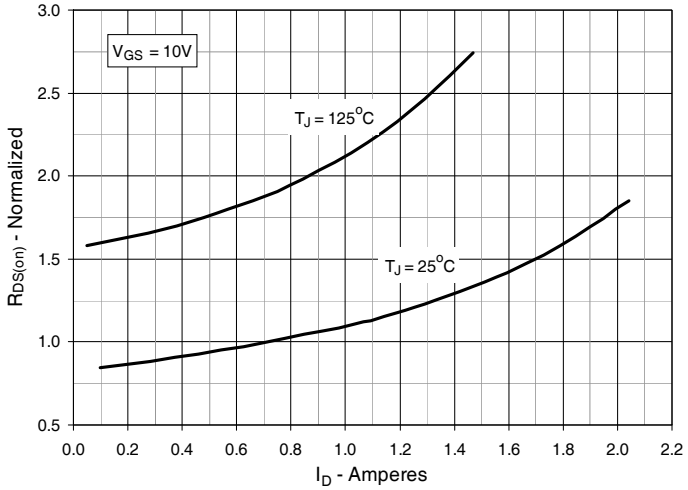

Fig. 6. Maximum Drain Current vs. Case Temperature

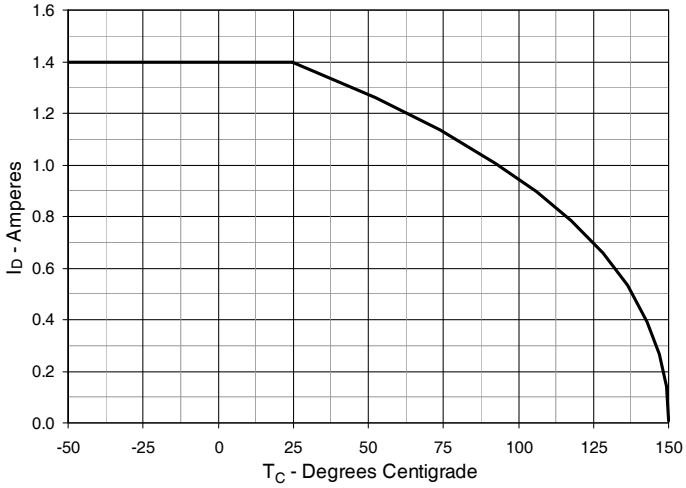

© 2017 IXYS CORPORATION, All Rights Reserved

Fig. 7. Input Admittance

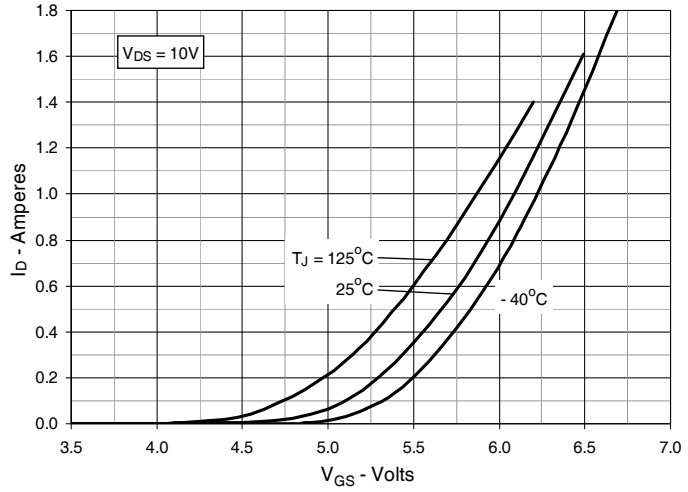

Fig. 8. Transconductance

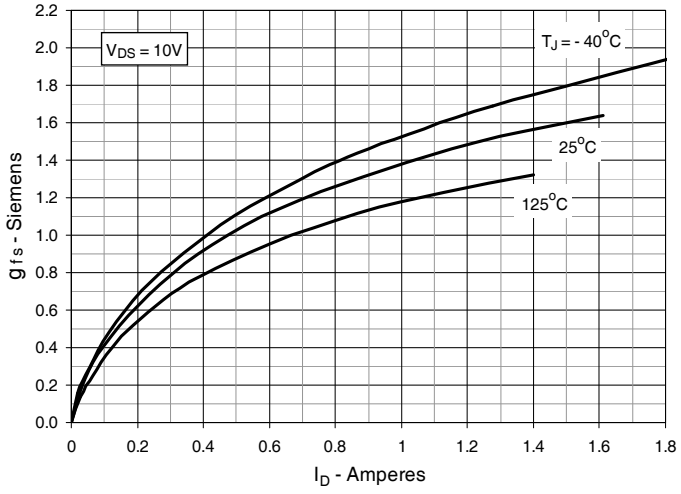

Fig. 9. Forward Voltage Drop of Intrinsic Diode

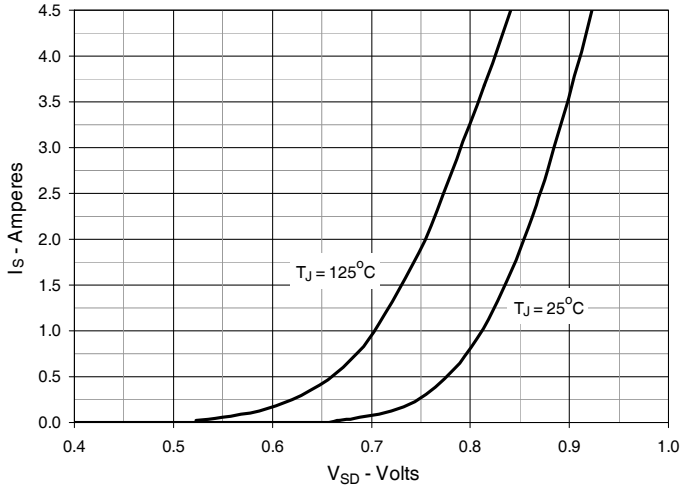

Fig. 10. Gate Charge

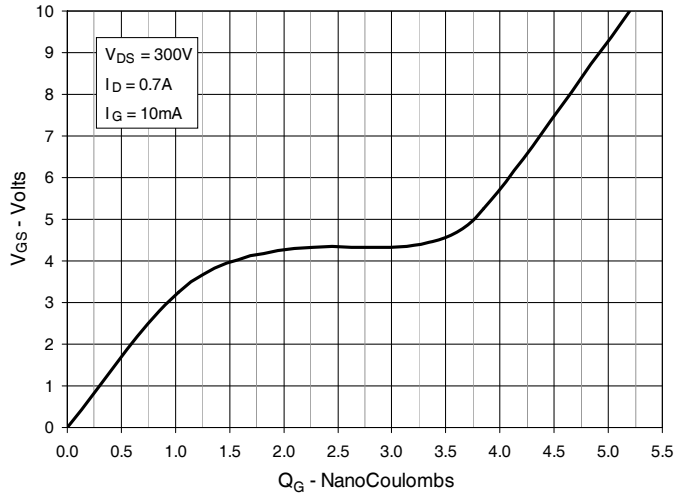

Fig. 11. Capacitance

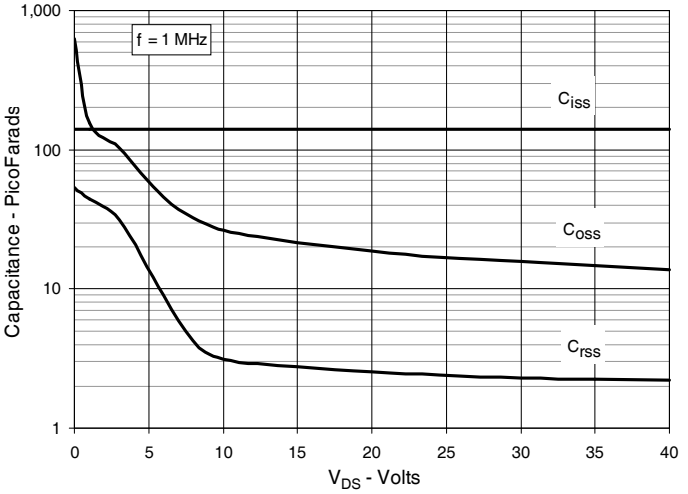

Fig. 12. Maximum Transient Thermal Impedance

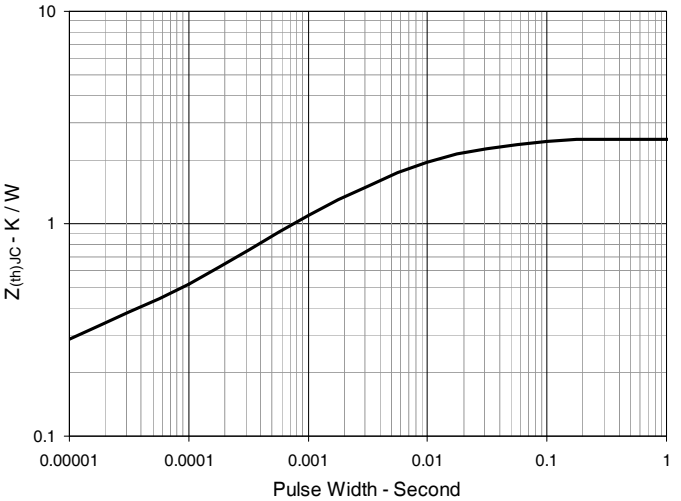

IXYS Reserves the Right to Change Limits, Test Conditions, and Dimensions.

TO-252 AA Outline

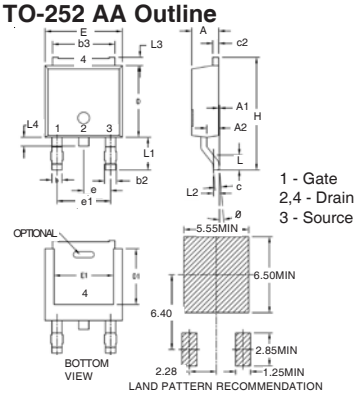

SYM	INCHES		MILLIMETERS	
	MIN	MAX	MIN	MAX
A	.086	.094	2.19	2.38
A1	0	.005	0	0.12
A2	.038	.046	0.97	1.17
b	.025	.035	0.64	0.89
b2	.030	.045	0.76	1.14
b3	.200	.215	5.08	5.46
c	.018	.024	0.46	0.61
c2	.018	.023	0.46	0.58
D	.235	.245	5.97	6.22
D1	.180	.205	4.57	5.21
E	.250	.265	6.35	6.73
E1	.170	.205	4.32	5.21
e	.090 BSC		2.28 BSC	
e1	.180 BSC		4.57 BSC	
H	.370	.410	9.40	10.42
L	.055	.070	1.40	1.78
L1	.100	.115	2.54	2.92
L2	.020 BSC		0.50 BSC	
L3	.025	.040	0.64	1.02
L4	.025	.040	0.64	1.02
θ	0°	10°	0°	10°

TO-220 Outline

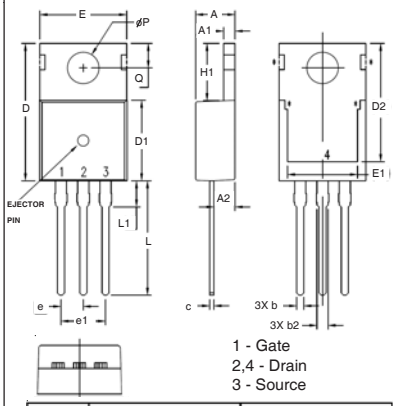

SYM	INCHES		MILLIMETERS	
	MIN	MAX	MIN	MAX
A	.169	.185	4.30	4.70
A1	.047	.055	1.20	1.40
A2	.079	.106	2.00	2.70
b	.024	.039	0.60	1.00
b2	.045	.057	1.15	1.45
c	.014	.026	0.35	0.65
D	.587	.626	14.90	15.90
D1	.335	.370	8.50	9.40
(D2)	.500	.531	12.70	13.50
E	.382	.406	9.70	10.30
(E1)	.283	.323	7.20	8.20
e	.100 BSC		2.54 BSC	
e1	.200 BSC		5.08 BSC	
H1	.244	.268	6.20	6.80
L	.492	.547	12.50	13.90
L1	.110	.154	2.80	3.90
ØP	.134	.150	3.40	3.80
Q	.106	.126	2.70	3.20

TO-251 OUTLINE

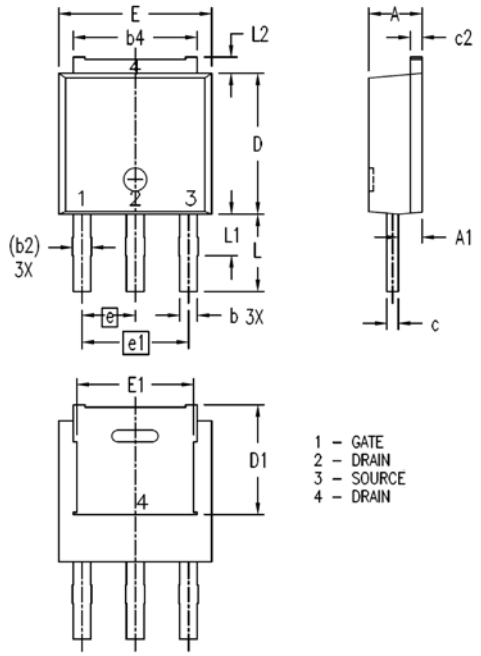

SYM	INCHES		MILLIMETERS	
	MIN	MAX	MIN	MAX
A	.087	.094	2.20	2.40
A1	.032	.048	0.82	1.22
b	.026	.034	0.66	0.86
(b2)	.030	.035	0.76	0.88
b4	.198	.222	5.04	5.64
c	.018	.024	0.45	0.60
c2	.016	.024	0.40	0.60
D	.232	.248	5.90	6.30
(D1)	.179	.195	4.55	4.95
E	.252	.268	6.40	6.80
(E1)	.191	.207	4.85	5.25
e	.090 BSC		2.28 BSC	
e1	.180 BSC		4.57 BSC	
L	.126	.138	3.20	3.50
L1	.063	.079	1.60	2.00
L2	.020	.035	0.50	0.90

© 2017 IXYS CORPORATION, All Rights Reserved

IXYS
A Littelfuse Technology

Disclaimer Notice - Information furnished is believed to be accurate and reliable. However, users should independently evaluate the suitability of and test each product selected for their own applications. Littelfuse products are not designed for, and may not be used in, all applications. Read complete Disclaimer Notice at www.littelfuse.com/disclaimer-electronics.