456 Series Fuse

Very Fast Acting Fuse

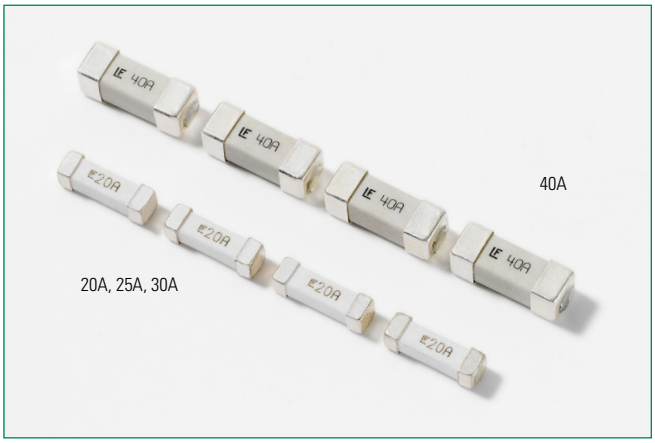

Description

The High Current NANO²® Fuse is a small square surface mount fuse that is designed to support higher current requirements of various applications.

Features

- Surface mount high current fuse
- Fully compatible with lead-free solder alloys and higher temperature profiles associated with lead-free assembly
- RoHS compliant and Halogen Free
- Available in ratings of 20 to 40 Amperes
- UL Recognized UL/CSA/NMX 248-1 and UL/CSA/NMX 248-14
- Conforms to IEC/EN 60127-1 and IEC/EN 60127-7
- Conforms to DENAN's Appendix 3

Additional Information

Resources | Accessories | Samples

Applications

- Voltage regulator module for PC server
- Cooling fan system for PC server
- Storage system power
- Basestation power supply

Electrical Characteristics

% of Ampere Rating	Opening Time
100%	4 hours, Minimum
200%	60 seconds, Maximum

Agency Approvals

Agency	Agency File/Certificate Number	Ampere Rating
	E10480	20A - 40A
	J50446929	20A - 40A
	NBK030308-JP1021	20A - 30A
	29862	20A - 40A

Electrical Specifications

Ampere Rating (A)	Amp Code	Max Voltage Rating (V)	Interrupting Rating[4]	Nominal Cold Resistance (Ohms)	Nominal Melting I²t (A² Sec.)	Nom Voltage Drop (mV)	Agency Approvals			
20	020.	125	100A @125VAC 300A @ 65VAC 300A @ 100VDC 1000A @ 32VDC 500A @ 72VDC	0.00230	18	64.7	x	x	x	x
25	025.	125	100A @ 125VAC 300A @ 65VAC 500A @ 72VDC 1000A @ 32VDC	0.00192	45	68.38	x	x	x	x
30	030.	125	100A @ 125VAC 300A @ 65VAC 1000A @ 32VDC 500A @ 72VDC	0.00132	81	69.9	x	x	x	x
40	040.	72	180A @ 72VDC 600A @ 60VDC	0.00105	191	55	x	x	-	x

Notes:
1. Cold resistance measured at less than 10% of rated current at 23°C.
2. Agency Approval Table Key: X=Approved or Certified, P=Pending.
3. I²t values stated for 1 msec opening time.
4. Interrupting Rating may differ based on Agency Approval. See Agency Approval certificate for more details.

© 2021 Littelfuse, Inc.
Specifications are subject to change without notice.
Revised: GD. 08/24/21

456 Series Fuse

Very Fast Acting Fuse

Temperature Re-rating Curve

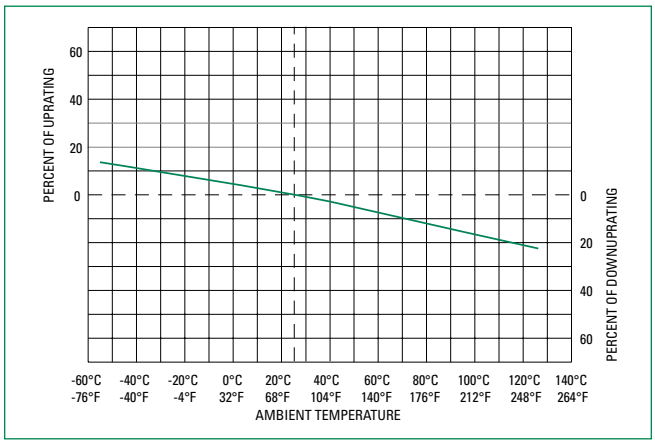

Note:
1. Rerating depicted in this curve is in addition to the standard derating of 25% for continuous operation.

Average Time Current Curves

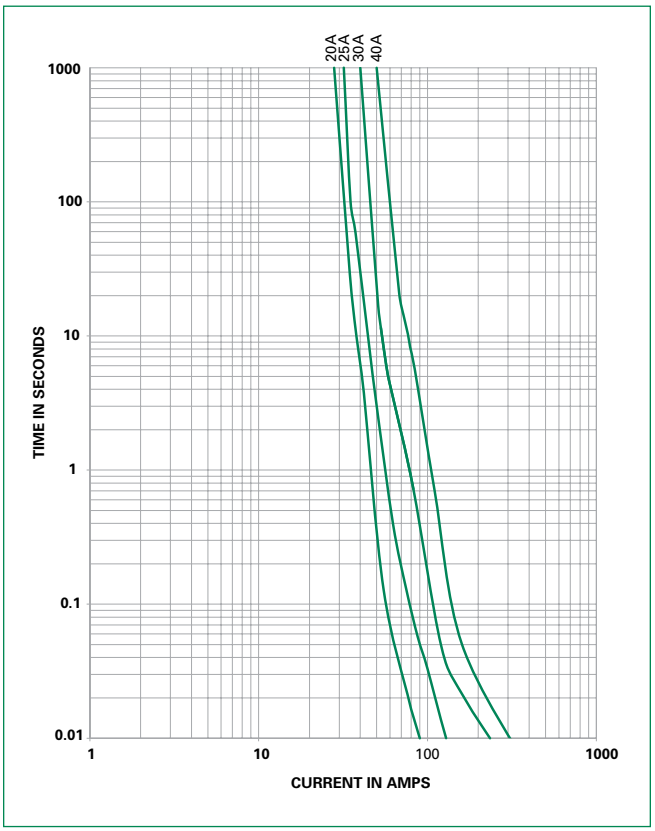

Soldering Parameters – Reflow Soldering

Reflow Condition		Pb – Free assembly
Pre Heat	**- Temperature Min ($T_{s(min)}$)**	150°C
	- Temperature Max ($T_{s(max)}$)	200°C
	- Time (Min to Max) (t_s)	60 – 180 secs
Average ramp up rate (Liquidus Temp (T_L) to peak		5°C/second max.
$T_{S(max)}$ to T_L - Ramp-up Rate		5°C/second max.
Reflow	**- Temperature (T_L) (Liquidus)**	217°C
	- Temperature (t_L)	60 – 150 seconds
Peak Temperature (T_P)		$260^{+0/-5}$ °C
Time within 5°C of actual peak Temperature (t_p)		20 – 40 seconds
Ramp-down Rate		5°C/second max.
Time 25°C to peak Temperature (T_P)		8 minutes max.
Do not exceed		260°C

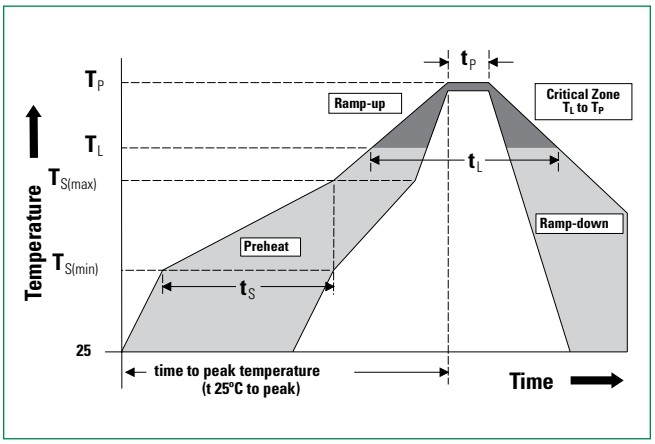

© 2021 Littelfuse, Inc.
Specifications are subject to change without notice.
Revised: GD. 08/24/21

456 Series Fuse

Very Fast Acting Fuse

Product Characteristics

Materials	Body: Ceramic Cap: Silver Plated Brass
Product Marking	Body: Brand Logo, Current Rating
Insulation Resistance	MIL-STD-202, method 302, Test Condition A (10,000 ohms, Minimum)
Solderability	MIL-STD-202, Method 208
Resistance to Soldering Heat	MIL-STD-202, Method 210, Test Condition B (10 sec at 260°C)
PCB Recommendation for Thermal Management	Min. copper layer thickness = 100µm Min. copper trace width =20A, 30 10mm (20A, 30A) / 15mm (40A) Alternate methods of thermal management may be used. In such cases, under normal operations, the maximum temperature of the fuse body should not exceed 90°C in a 25°C environment.

Operating Temperature	-55°C to 125°C with proper derating
Thermal Shock	MIL-STD-202, Method 107, Test Condition B (5 cycles -65°C to 125°C)
Vibration	MIL-STD-202, Method 201 (10-55 Hz)
Moisture Sensitivity Level	J-STD-020, Level 1
Moisture Resistance	MIL-STD-202 Method 106, High Humidity (90-98%RH), Heat (65°C)
Salt Spray	MIL-STD-202, Method 101, Test Condition B
Mechanical Shock	MIL-STD-202, Method 213, Test Condition I (100 G's peak for 6 milliseconds)

Dimensions

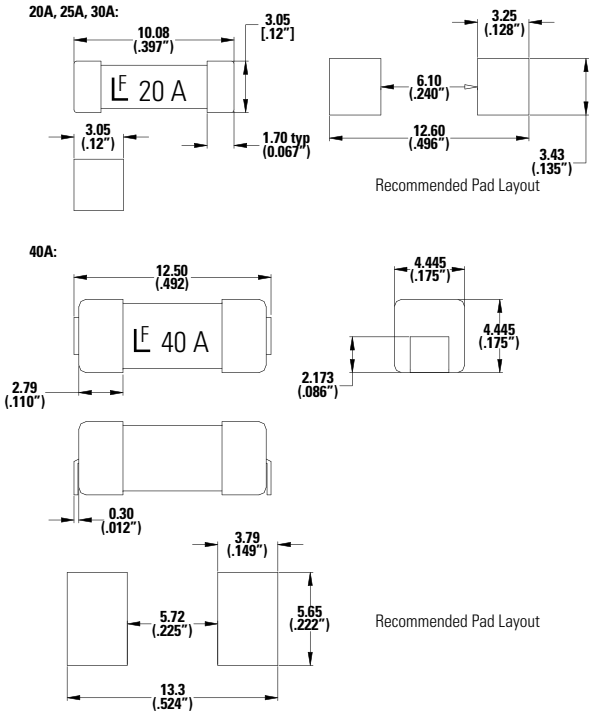

Part Numbering System

0456 020. E R

Series — 0456

Amp Code — 020.
Refer to Electrical characteristics table

Quantity code — E
E = 2500 pcs
D = 1500 pcs

Packaging code — R
R = Tape and Reel

Packaging

Rating	Packaging Option	Packaging Specification	Quantity	Quantity & Packaging Code
20A, 25A, 30A	24 mm Tape and Reel	EIA RS-481-2	2500	ER
40A	24 mm Tape and Reel	EIA RS-481-2 (IEC 286, part 3)	1500	DR

Disclaimer Notice - Littelfuse products are not designed for, and shall not be used for, any purpose (including, without limitation, automotive, military, aerospace, medical, life-saving, life-sustaining or nuclear facility applications, devices intended for surgical implant into the body, or any other application in which the failure or lack of desired operation of the product may result in personal injury, death, or property damage) other than those expressly set forth in applicable Littelfuse product documentation. Warranties granted by Littelfuse shall be deemed void for products used for any purpose not expressly set forth in applicable Littelfuse documentation. Littelfuse shall not be liable for any claims or damages arising out of products used in applications not expressly intended by Littelfuse as set forth in applicable Littelfuse documentation. The sale and use of Littelfuse products is subject to Littelfuse Terms and Conditions of Sale, unless otherwise agreed by Littelfuse. Information furnished is believed to be accurate and reliable. However, users should independently evaluate the suitability of and test each product selected for their own applications. Littelfuse products are not designed for, and may not be used in, all applications. Read complete Disclaimer Notice at www.littelfuse.com/disclaimer-electronics.

© 2021 Littelfuse, Inc.
Specifications are subject to change without notice.
Revised: GD. 08/24/21