IXYS

HiPerFET™ Power MOSFETs Q Class

IXFH 12N90Q
IXFT 12N90Q

V_{DSS} = 900 V
I_{D25} = 12 A
$R_{DS(on)}$ = 0.9 Ω

$t_{rr} \leq$ 200 ns

N-Channel Enhancement Mode
Avalanche Rated
Low Q_g, High dv/dt

Preliminary data sheet

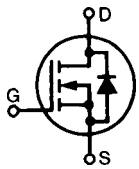

Symbol	Test Conditions	Maximum Ratings	
V_{DSS}	T_J = 25°C to 150°C	900	V
V_{DGR}	T_J = 25°C to 150°C; R_{GS} = 1 MΩ	900	V
V_{GS}	Continuous	±20	V
V_{GSM}	Transient	±30	V
I_{D25}	T_C = 25°C	12	A
I_{DM}	T_C = 25°C, pulse width limited by T_{JM}	48	A
I_{AR}	T_C = 25°C	12	A
E_{AR}	T_C = 25°C	30	mJ
dv/dt	$I_S \leq I_{DM}$, di/dt ≤ 100 A/µs, $V_{DD} \leq V_{DSS}$, $T_J \leq$ 150°C, R_G = 2 Ω	5	V/ns
P_D	T_C = 25°C	300	W
T_J		-55 ... +150	°C
T_{JM}		150	°C
T_{stg}		-55 ... +150	°C
T_L	1.6 mm (0.063 in) from case for 10 s	300	°C
M_d	Mounting torque	1.13/10	Nm/lb.in.
Weight	TO-247 AD	6	g
	TO-268	4	g

Symbol	Test Conditions		Characteristic Values (T_J = 25°C, unless otherwise specified) min.	typ.	max.	
V_{DSS}	V_{GS} = 0 V, I_D = 3 mA		900			V
$V_{GS(th)}$	V_{DS} = V_{GS}, I_D = 4 mA		2.5		5.5	V
I_{GSS}	V_{GS} = ±20 V_{DC}, V_{DS} = 0				±100	nA
I_{DSS}	V_{DS} = 0.8 • V_{DSS}	T_J = 25°C			50	µA
	V_{GS} = 0 V	T_J = 125°C			1	mA
$R_{DS(on)}$	V_{GS} = 10 V, I_D = 0.5 I_{D25} Pulse test, t ≤ 300 µs, duty cycle d ≤ 2 %				0.9	Ω

TO-247 AD (IXFH)

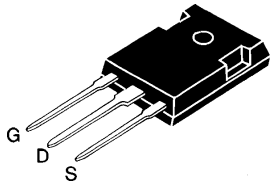

TO-268 (D3) (IXFT)

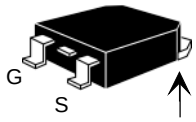

G = Gate D = Drain
S = Source TAB = Drain

Features

- IXYS advanced low Q_g process
- Low gate charge and capacitances
  - easier to drive
  - faster switching
- International standard packages
- Low $R_{DS(on)}$
- Unclamped Inductive Switching (UIS) rated
- Molding epoxies meet UL 94 V-0 flammability classification

Advantages

- Easy to mount
- Space savings
- High power density

IXYS reserves the right to change limits, test conditions, and dimensions.

© 2000 IXYS All rights reserved

Symbol	Test Conditions	Characteristic Values (T_J = 25°C, unless otherwise specified) min.	typ.	max.	
g_{fs}	V_{DS} = 10 V; I_D = 0.5 • I_{D25}, pulse test	6	10		S
C_{iss}	V_{GS} = 0 V, V_{DS} = 25 V, f = 1 MHz		2900		pF
C_{oss}			315		pF
C_{rss}			50		pF
$t_{d(on)}$	V_{GS} = 10 V, V_{DS} = 0.5 • V_{DSS}, I_D = 0.5 • I_{D25}, R_G = 2 Ω (External),		20		ns
t_r			23		ns
$t_{d(off)}$			40		ns
t_f			15		ns
$Q_{g(on)}$	V_{GS} = 10 V, V_{DS} = 0.5 • V_{DSS}, I_D = 0.5 • I_{D25}		90		nC
Q_{gs}			30		nC
Q_{gd}			40		nC
R_{thJC}				0.42	K/W
R_{thCK}	(TO-247)		0.25		K/W

TO-247 AD (IXFH) Outline

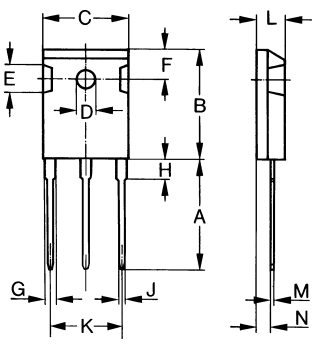

Dim.	Millimeter Min.	Max.	Inches Min.	Max.
A	19.81	20.32	0.780	0.800
B	20.80	21.46	0.819	0.845
C	15.75	16.26	0.610	0.640
D	3.55	3.65	0.140	0.144
E	4.32	5.49	0.170	0.216
F	5.4	6.2	0.212	0.244
G	1.65	2.13	0.065	0.084
H	-	4.5	-	0.177
J	1.0	1.4	0.040	0.055
K	10.8	11.0	0.426	0.433
L	4.7	5.3	0.185	0.209
M	0.4	0.8	0.016	0.031
N	1.5	2.49	0.087	0.102

Source-Drain Diode — Characteristic Values (T_J = 25°C, unless otherwise specified)

Symbol	Test Conditions	min.	typ.	max.	
I_S	V_{GS} = 0 V			12	A
I_{SM}	Repetitive; pulse width limited by T_{JM}			48	A
V_{SD}	I_F = I_S, V_{GS} = 0 V, Pulse test, t ≤ 300 µs, duty cycle d ≤ 2 %			1.3	V
t_{rr}	I_F = I_S, -di/dt = 100 A/µs, V_R = 100 V		200		ns
Q_{RM}			0.6		µC
I_{RM}			7		A

TO-268AA (D³ PAK)

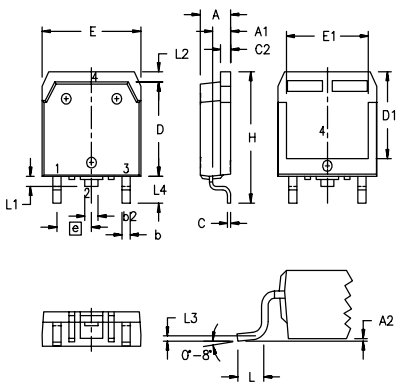

Dim.	Millimeter Min.	Max.	Inches Min.	Max.
A	4.9	5.1	.193	.201
A_1	2.7	2.9	.106	.114
A_2	.02	.25	.001	.010
b	1.15	1.45	.045	.057
b_2	1.9	2.1	.75	.83
C	.4	.65	.016	.026
D	13.80	14.00	.543	.551
E	15.85	16.05	.624	.632
E_1	13.3	13.6	.524	.535
e	5.45 BSC		.215 BSC	
H	18.70	19.10	.736	.752
L	2.40	2.70	.094	.106
L1	1.20	1.40	.047	.055
L2	1.00	1.15	.039	.045
L3	0.25 BSC		.010 BSC	
L4	3.80	4.10	.150	.161

Min. Recommended Footprint

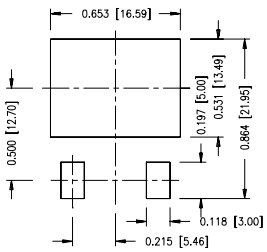

© 2000 IXYS All rights reserved

IXYS MOSFETS and IGBTs are covered by one or more of the following U.S. patents:
4,835,592 4,881,106 5,017,508 5,049,961 5,187,117 5,486,715
4,850,072 4,931,844 5,034,796 5,063,307 5,237,481 5,381,025

IXYS
A Littelfuse Technology

Disclaimer Notice - Information furnished is believed to be accurate and reliable. However, users should independently evaluate the suitability of and test each product selected for their own applications. Littelfuse products are not designed for, and may not be used in, all applications. Read complete Disclaimer Notice at www.littelfuse.com/disclaimer-electronics.