RESISTANCE/TEMPERATURE TABLE			
TEMP (°C)	RESIS (Ω)	TEMP (°C)	RESIS (Ω)
−40	212,494	45	4,892
−35	159,470	50	4,142
−30	120,944	55	3,523
−25	92,639	60	3,010
−20	71,626	65	2,581
−15	55,871	70	2,223
−10	43,947	75	1,922
−5	34,842	80	1,667
0	27,831	85	1,451
5	22,390	90	1,268
10	18,134	95	1,111
15	14,782	100	976.3
20	12,123	105	860.7
25	10,000	110	760.9
30	8,298	115	674.5
35	6,923	120	599.6
40	5,805	125	534.3

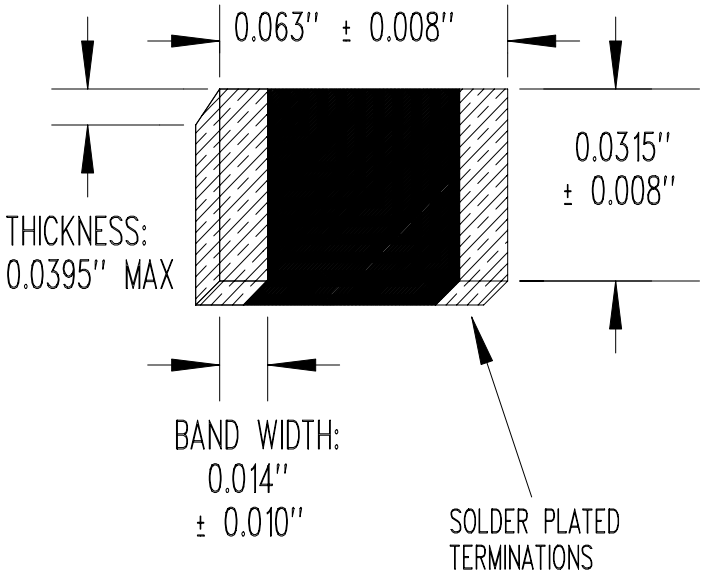

RESISTANCE @ +25°C = 10,000 Ω ± 5%
BETA "β" (+25 TO +85°C) = 3,435°K NOMINAL
POWER RATING = 150 mW
OPERATING TEMPERATURE RANGE = −40 TO +125°C

SEE MANUFACTURING SPECIFICATION (LAYER 1)

REV	REVISION RECORD	DATE	APP
NONE	RELEASE TO PRODUCTION	12/11/03	DD

SCALE NONE

DRAWN BY
DAN DANKERT

DATE 12/11/03

REV. NONE

LAYER 0 OF 2

U.S. SENSOR CORP.
1832 W. COLLINS AVE.
ORANGE, CA. 92867
714-639-1000 www.ussensor.com

THERMISTOR, NTC CHIP

P/N RB103E0J