Installation Instructions

DCNEV150 Series High Current High Voltage DC Contactor Relays
Part Numbers: DCNEV150-M, DCNEV150-MA, DCNEV150-MAN & DCNEV150-MN

Littelfuse®
Expertise Applied | Answers Delivered

Specifications Overview

Amperage:	150A Continuous Carry
Housing:	Nylon UL 94-V0
Voltage Rating:	900V
Output Connectors:	M8 x 1.25 High Current Connections
Connectors:	Wire Leads for Control Circuit
Operating Temperature:	-40°C to 85°C
Circuity:	SPST NO
Working Voltage:	9-36V DC
Max Coil Inrush Current:	3.8A
Mounting:	#10 with Compression Limiters
Mounting Bolt Torque:	1.7 - 3.3 Nm (15- 30 in-lb)
Contact Torque:	8.8 - 11 Nm (80-100 in-lb)
Terminals:	M8 Silver Plated Copper
Approvals:	UL File No. E510407

Web Resources

Download 2D print and technical resources at:
littelfuse.com/DCNEV150

Installation

Assemble the Contactor Relay in the following sequence:

1. **Prepare the Work Area** - It is always advisable when working with electricity to take caution and turn off any power unit you may encounter while installing any electrical device.
2. **Mount the Contactor** - Mount the contactor using the mounting hardware that is supplied with the contactor or the recommended fasteners.
3. **Prepare the Wiring and Connect the Control Wires**- Strip all the wires that will be connected to the control coil and the contactor terminations with a wire stripper. Remove approximately ½ inch of the wire's insulation to expose the bare copper wire. Connect the control wires to the coil solenoid first, red and black wires on contactor. When installing the wires, be sure that a good electrical connection is made by using an appropriate electrical connector. Do not allow any loose strands to short against any equipment and cause electrical damage.
4. **Connecting the Switched Power Wires** - Verify the switched contacts are open, no continuity between terminals "+C" and "-C". Using the hardware that is supplied with the contactor or the recommended fasteners, connect the Line power feed wire to the contactor terminal marked "+C". Connect the Load power output wire to the contactor terminal marked "-C". As with the control wires, be sure that a good electrical connection is made. Do not allow any loose strands to short against any equipment and cause electrical damage.
5. **Connecting the Switched Auxiliary Contact Wires** - If an Auxiliary Contact is provided, connect the low power Line feed wire to one of the white wires and the low power Load output wire to the remaining white wire. When installing the wires, be sure that a good electrical connection is made. Do not allow any loose strands to short against any equipment and cause electrical damage.

Step by step images shown in Figure 2 on page 2.

Electrical Diagram

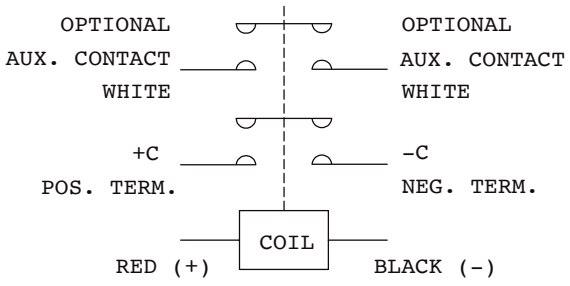

WARNING

The installation and the operation of this device and any maintenance must be carried out by a qualified person in accordance with specific local standards and safety regulations.

Do not touch live parts.

To avoid damage to persons and material, the device must be replaced in case of mechanical and/or electrical damage. These installation instructions do not contain all detailed information of this product and do not consider every possible application of the product.

For DCN Series Contactor Relays with polarized terminals, it is important to ensure that the positive input from the power source is connected to the + (positive) terminal and the load is connected to the – (negative) terminal. Incorrect connections can greatly affect the expected life of the contactor relay. DCN Series Contactor Relays with non-polarized terminals may have the power source and load connected to either terminal.

© 2019 Littelfuse Commercial Vehicle Products
littelfuse.com

Installation Instructions

DCNEV150 Series High Current High Voltage DC Contactor Relays
Part Numbers: DCNEV150-M, DCNEV150-MA, DCNEV150-MAN & DCNEV150-MN

Littelfuse®
Expertise Applied | Answers Delivered

Figure 2 - Step by Step Installation

STEP 1

DANGER

Electrical Hazard
Turn Off Power Before Servicing

It is always advisable when working with electricity to take caution and turn off any power unit you may encounter while installing any electrical device.

STEP 2

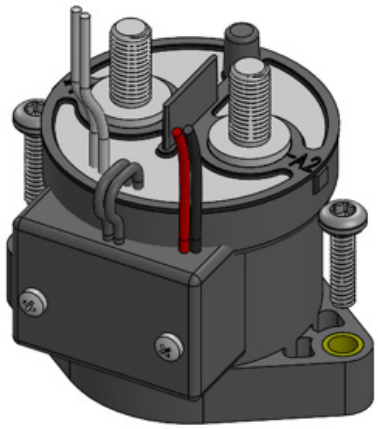

Mount the contactor using the mounting hardware that is supplied with the contactor or the recommended fasteners.

STEP 3

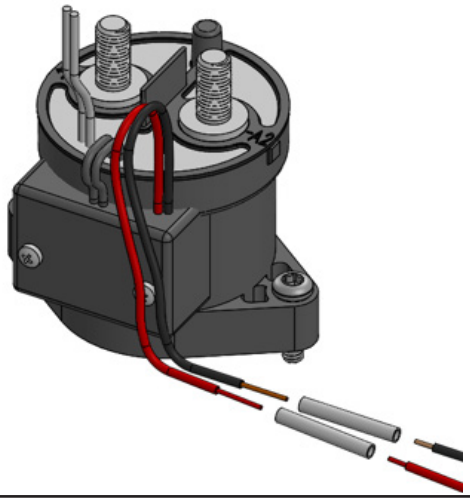

Strip all the wires that will be connected to the control coil and the contactor terminations with a wire stripper. Remove approximately ½ inch of the wire's insulation to expose the bare copper wire. Connect the control wires to the coil solenoid first, red and black wires on contactor. When installing the wires, be sure that a good electrical connection is made by using an appropriate electrical connector. Do not allow any loose strands to short against any equipment and cause electrical damage.

STEP 4

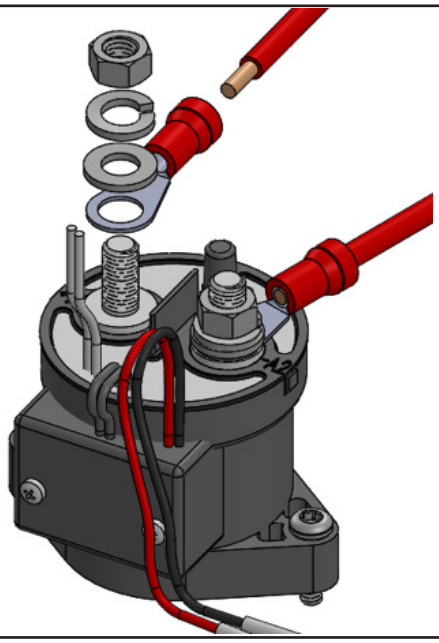

Verify the switched contacts are open, no continuity between terminals "+C" and "-C". Using the hardware that is supplied with the contactor or the recommended fasteners, connect the Line power feed wire to the contactor terminal marked "+C". Connect the Load power output wire to the contactor terminal marked "-C". As with the control wires, be sure that a good electrical connection is made. Do not allow any loose strands to short against any equipment and cause electrical damage.

STEP 5

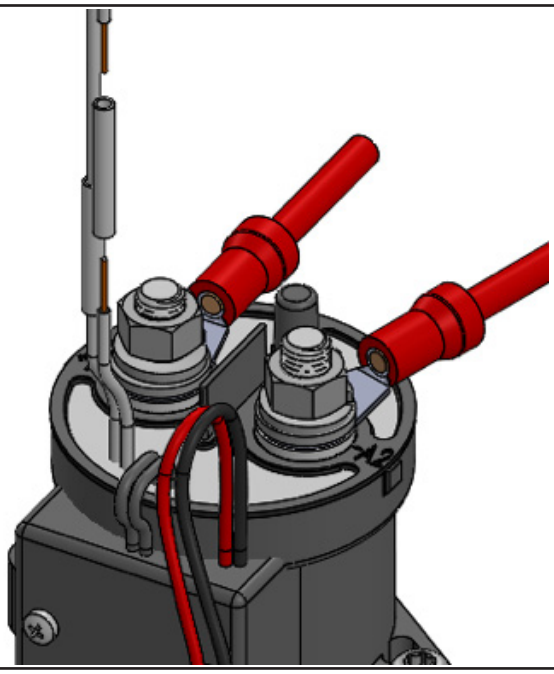

If an Auxiliary Contact is provided, connect the low power Line feed wire to one of the white wires and the low power Load output wire to the remaining white wire. When installing the wires, be sure that a good electrical connection is made. Do not allow any loose strands to short against any equipment and cause electrical damage.

© 2019 Littelfuse Commercial Vehicle Products
littelfuse.com