Littelfuse®

Expertise Applied | Answers Delivered

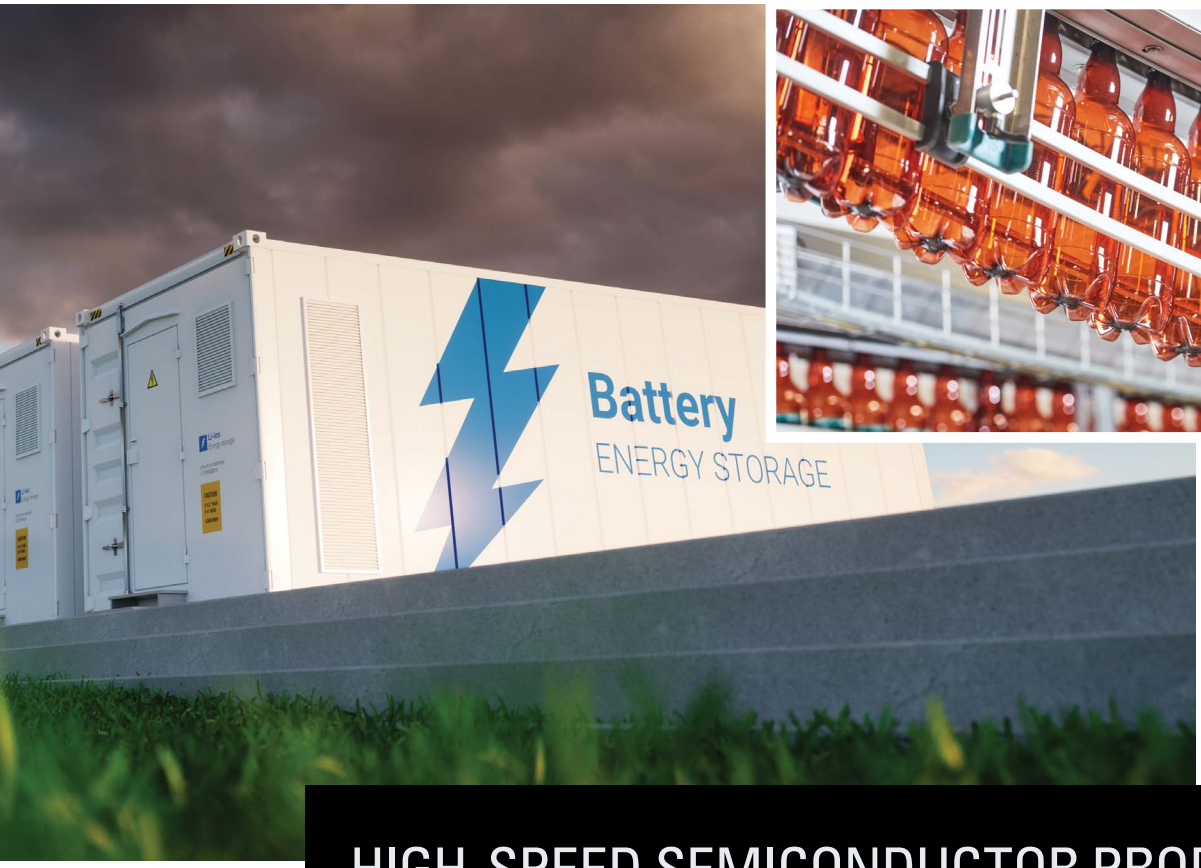

HIGH-SPEED SEMICONDUCTOR PRODUCTS CATALOG

POWR-*SPEED*® PRODUCTS HIGH-SPEED FUSES FUSE BLOCKS & HOLDERS
MICROSWITCHES SPECIAL PURPOSE FUSES

Battery Protection Fuses

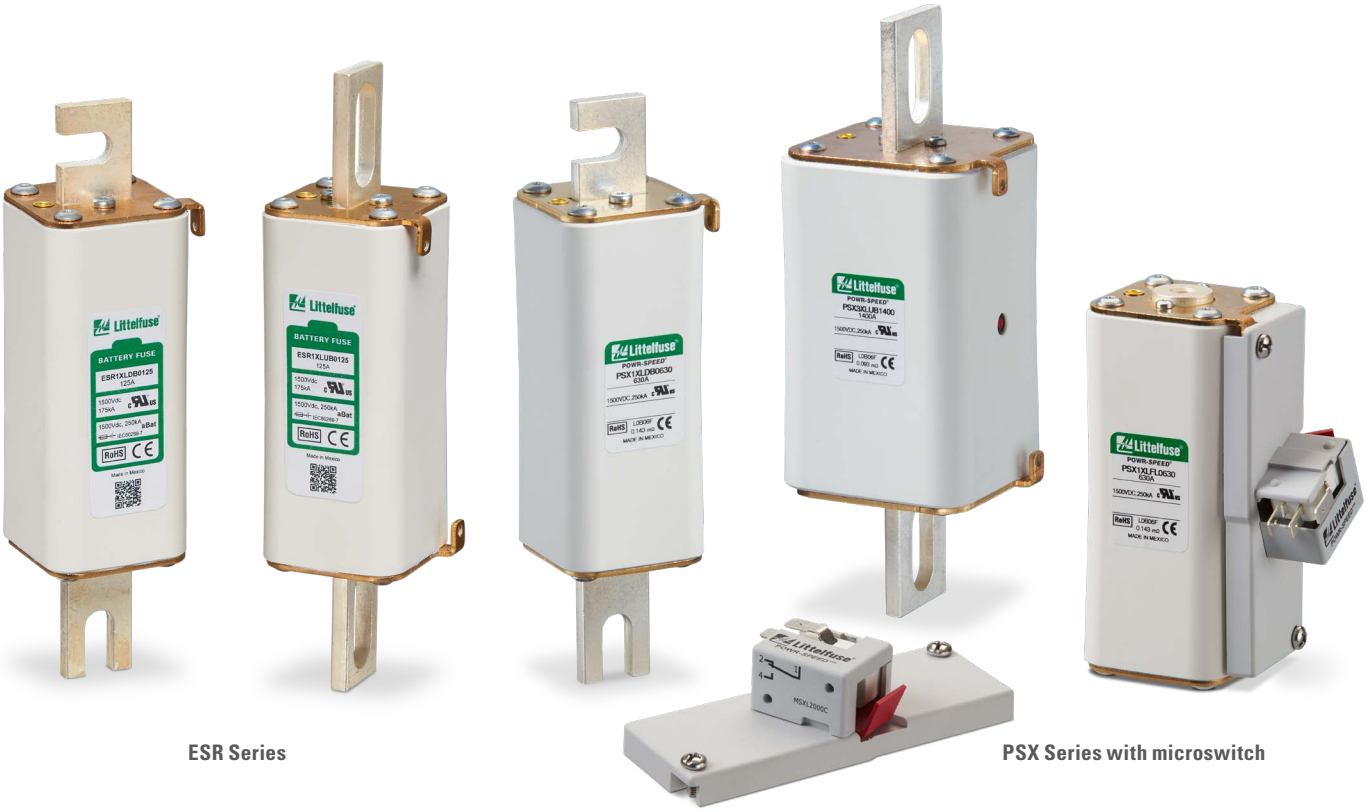

ESR Series

PSX Series with microswitch

Battery protection requires higher dc voltage, dc current and interrupting rating fuses then other applications. These specialty fuses deliver high-speed protection at the increased voltage coupled with better interrupting ratings, to prevent costly catastrophic failures due to overcurrents.

High-Speed Semiconductor Fuses Catalog

TABLE OF CONTENTS

INTRODUCTION

POWR-*SPEED*® High-Speed Semiconductor Fuses 2

POWR-*SPEED* FUSES

High-Speed Square-Body Fuses

ESR Series 6
PSX Series 9
PSR Series Flush End 12
PSR Series Bolted Blade 18
PSR Series DIN Blade 24

High-Speed Round-Body Fuses

L75QS Series 30
L70QS Series 33
L50QS Series 36
L70S Series 40
L50S Series 43
L15S Series 46
L25S Series 50
L60S / KLC Series 54

POWR-*SPEED* FUSE ACCESSORIES

LSCR Series High-Speed Fuse Blocks 58
MS Series High-Speed Microswitches 62

SPECIAL PURPOSE FUSES

Telecommunications

L17T Series Telecom Power Fuses 64
TLS Series Telecom Power Fuses 65

CROSS REFERENCE GUIDE

POWR-*SPEED* Fuse Cross Reference 68

© 2023 Littelfuse, Inc.

POWR-*SPEED*®

High-Speed

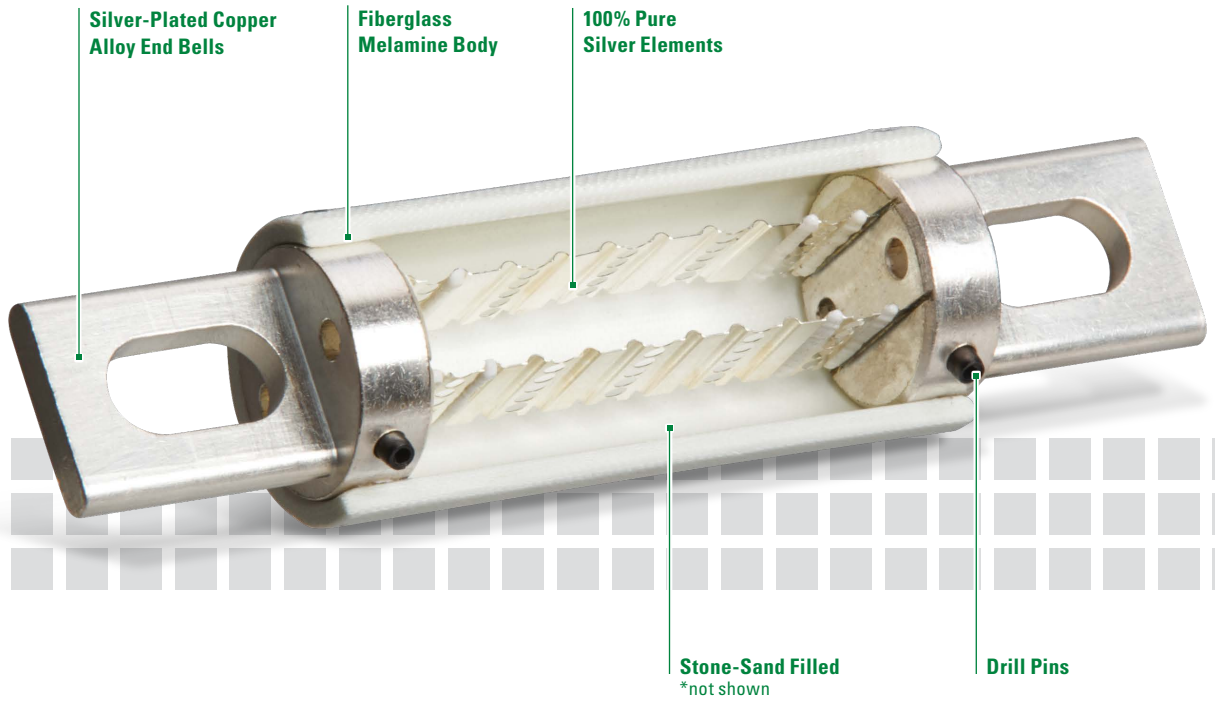

OPTIMIZED FOR PERFORMANCE AND EFFICIENCY

POWR-*SPEED* high-speed fuses are optimized for performance and efficiency to better protect your critical power semiconductors against short circuits. These certified fuses are reliable and fast-acting to help extend the life of your equipment.

The POWR-*SPEED* high-speed fuses are easy to retrofit as drop-in replacements where similar products are currently used. Plus, custom designs are available if you need a specific fuse for your application.

Contact us. Our engineers are eager to partner with you before, during, and long after the design process to meet your specific needs.

© 2023 Littelfuse, Inc.

Semiconductor Fuses

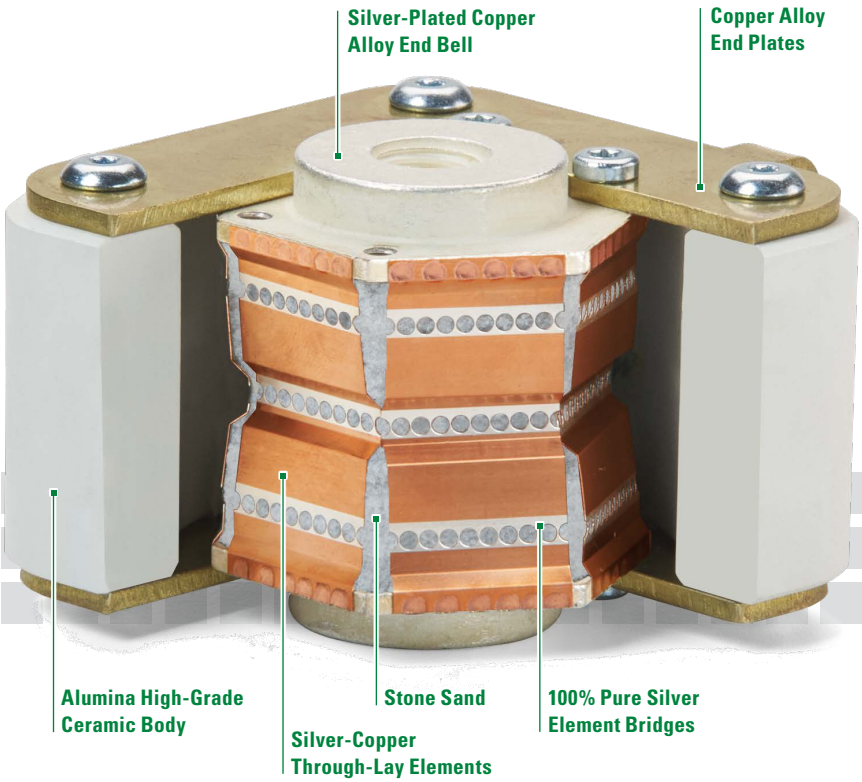

FEATURES	BENEFITS
Extremely Current Limiting	Reduces peak let-through current and let-through energy (I^2t) to protect semiconductor components and devices
Low Watt Loss	Saves energy wasted during operation
Resilient Labeling*	Laser etched resistance values eliminate labels that erode over time
All Ratings Published on Label**	Eliminates confusion when replacing and inspecting
Universal Blade Mounting	Quick and easy field replacement
Flush End Terminals**	Flexibility to mount directly to bus-bar
RoHS and REACH Compliant	Environment friendly, offering greater acceptance in global power electronics
Silicone Sealant**	Prevents sand leakage and improves reliability
High Dc Interrupting Rating**	Achieves an interrupting rating of 150 kA for applications that require more power

*Round-body style only
**Square-body style only

© 2023 Littelfuse, Inc.

Fast acting, high speed aBat performance in smallest package size on the market

© 2023 Littelfuse, Inc.

PSX Series Fuses	
FEATURES	**BENEFITS**
Low watt loss	Prevents energy loss, more efficient, minimizes wasted power from components
Compact size	Facilitates design of smaller or more compact high energy density systems
Visual indication is standard	Easily detectable in the event of a fault
High dc voltage rating to 1500 V dc	Protection for highest rated dc battery energy storage systems in the market
Dc breaking capacity up to 250 kA at 1500 V dc	Facilitates design of long duration battery energy storage systems
Three terminations	Allows more versatility with mounting configurations
Low minimum breaking capacity	Offers protection for lower levels of fault current

Download Our Guide on High-Speed Fuse Protection

An important part of developing quality overcurrent protection is understanding the system's needs as well as overcurrent protective device fundamentals. For an in-depth look at high-speed fuse protection visit **Littelfuse.com/Powr-Speed-Application-Guide** and download the guide.

© 2023 Littelfuse, Inc.

Battery Protection Fuses • 1500 V Dc • Class aBat • 125 A

Description

The Littelfuse Energy Storage Rack (ESR) series of fuses is designed specifically to protect battery racks in energy storage systems, inverters, and many other dc applications. The 1500 V dc high-speed square body fuse is extremely fast-acting to respond quickly to a range of fault currents to safeguard the battery module or other devices.

This Class aBat partial range fuse has superior short circuit protection and a low minimum breaking capacity (MBC)—from 300 % or 3 times the fuse's rated current to 175 kA (250 kA self-certified)—to cover a range of over currents that traditional high-speed partial range fuses do not protect against.

The ESR fuse safely interrupts most faults in a battery storage system to avoid catastrophic failures and costly shutdowns.

Features & Benefits

FEATURES	BENEFITS
High dc interrupting rating	Provides superior short-circuit protection and the ability to scale-up systems without the need to redesign the existing circuit protection, saving time and costs
Low minimum breaking current	Offers easy coordination with battery modules and reduces size and rating of dc contactors to save space and costs
Extremely fast acting	Delivers high-speed performance
Low watt loss	Maximizes efficiency by preventing energy loss and minimizing the wasted power of components
Conforms to the IEC60269-7 battery standard	Specifically design to safeguard evolving battery technologies with fuse circuit protection
Compact NH 1XL size	Saves space and offers design flexibility

Applications

- Battery energy storage systems (BESSs)
  – Battery Protection Unit (BPU) and battery racks
- Power conversion systems
- Dc common bus systems
- Hybrid PV-BESS inverters

© 2023 Littelfuse, Inc.

Specifications

Voltage Rating	1500 V dc
Amperage Rating	125 A
Interrupting Rating	175 kA UL (250 kA self-certified)
Time Constant	</= 3 ms
Mounting	Bolted-blade style, DIN-blade style
Material	Body: ceramic Contacts: plated copper (bladed)
Applicable Standards	UL 248-13, IEC 60269-7
Environmental	RoHS Compliant, REACH, Halogen Free
Operating Temperature	-55 °C to +125 °C
Storage Temperature	Up to +35 °C with relative humidity <65 %
Country of Origin	Mexico

Certification & Compliance

cURus	cURus Recognized (File: E71611)
CE	ESR_UB_220411_0
RoHS	RoHS 2 Directive 2011/65/EU Directive (EU) 2015/863
REACH	Regulation (EC) 1907/2006
UKCA	UKCA-ESR_UB_220621_0

Ordering Information

CASE SIZE	CATALOG NUMBER	ORDERING NUMBER	UPC	BOX QUANTITY
NH 1XL	ESR1XLDB0125	ESR1XLDB0125X	07945830630	1 pc/box
NH 1XL	ESR1XLUB0125	ESR1XLUB0125X	07945830629	1 pc/box

Electrical Specifications

CASE SIZE	CATALOG NUMBER		AMPERE RATING (A)	VOLTAGE RATING (V)	INTERRUPTING RATING	MINIMUM BREAKING CAPACITY (A)	MELTING (PRE-ARC) I^2T (A^2S)	TOTAL CLEARING I^2T (A^2S) AT RATED VOLTAGE	WATTS LOSS AT 100 % RATED CURRENT (W)	AGENCY CERTIFICATION
	BOLTED BLADE (UB)	DIN BLADE (DB)		DC	DC			DC		cURus
NH 1XL	ESR1XLUB0125	ESR1XLDB0125	125	1500	175 kA (250 kA Self-certified)	375	2245	45000	53	•

© 2023 Littelfuse, Inc.

Dimensions

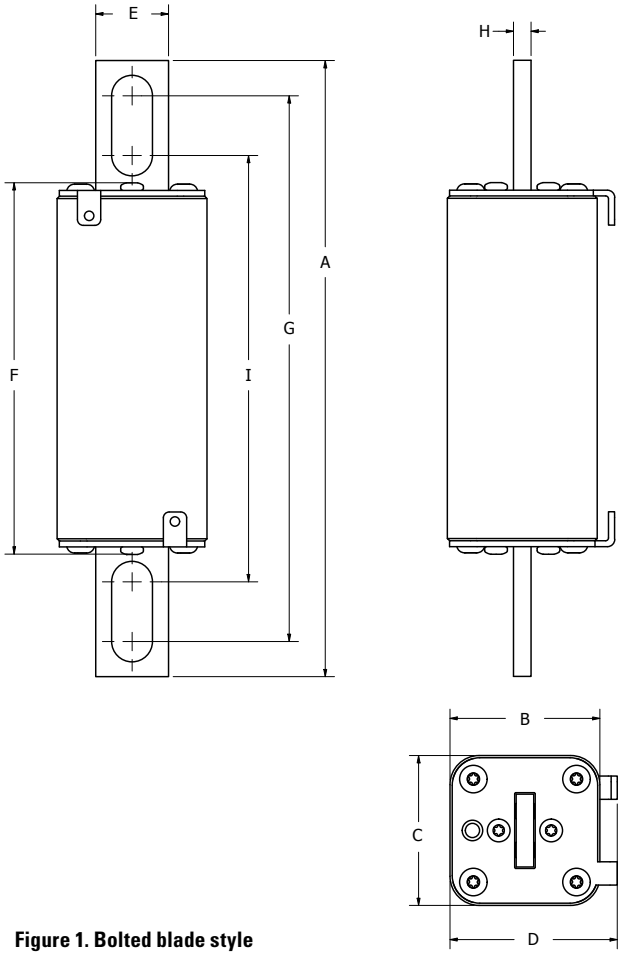

Figure 1. Bolted blade style

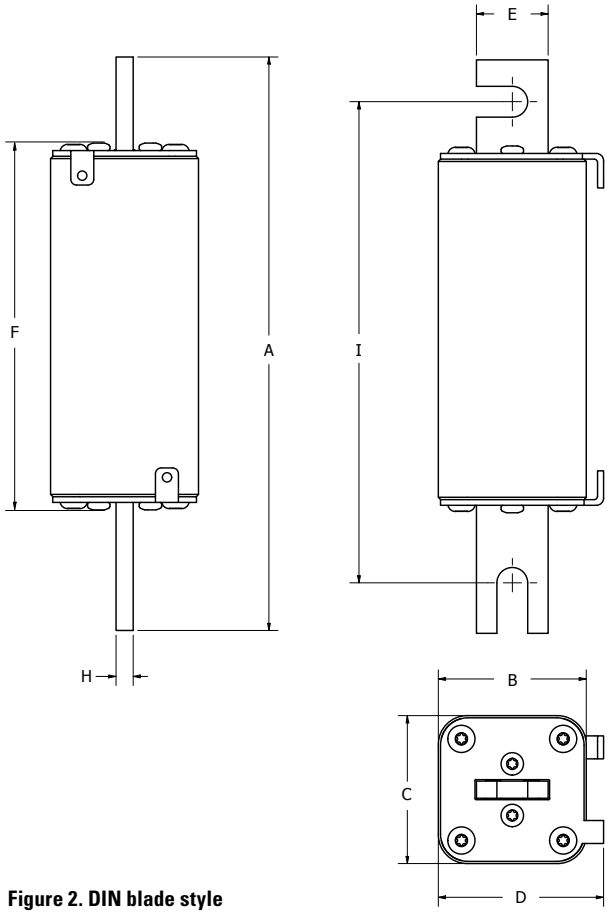

Figure 2. DIN blade style

DIMENSIONS MM (IN)													
CASE SIZE	MOUNTING STYLE	FIGURE	A	B	C	D	E	F	G	H	I	RECOMMENDED FASTENER	RECOMMENDED TORQUE
NH 1XL	BOLTED BLADE (UB)	1	211.7 (8.33)	51.5 (2.03)	51.5 (2.03)	57.5 (2.26)	25.0 (0.98)	127.7 (5.03)	187.5 (7.38)	6.0 (0.24)	146.5 (5.77)	12 (½)	64 Nm
NH 1XL	DIN BLADE (DB)	2	199.7 (7.86)	51.5 (2.03)	51.5 (2.03)	57.5 (2.26)	25.0 (0.98)	127.7 (5.03)	-	6.0 (0.24)	167.5 (6.59)	10 (3/8)	26 Nm

© 2023 Littelfuse, Inc.

Battery Protection Fuses • 1500 V Dc Class aBat • 80 A–1400 A

Description

Littelfuse PSX series 1500 V dc high-speed square body fuses are specially designed to protect battery energy storage systems (BESS), photovoltaic inverters, and many dc applications such as dc common bus systems, larger industrial regenerative drives, rectifiers and metal processing equipment.

The PSX series fuses are extremely fast-acting, offering high-speed performance up to 1500 V dc, ranging from 80 A to 1400 A in the smallest NH XL package sizes. The PSX series is available with multiple mounting terminations including flush-end, DIN, and bolted-blade styles. Visual blown fuse indication is standard on all fuses and optional micro-switch is available for external indication.

The PSX series is certified to UL248-13 and designed to meet IEC 60269-7 (Class aBat) battery protection fuse standard.

Features/Benefits

- High dc voltage rating up to 1500 V dc
- Dc interrupting rating is 250 kA
- Extremely fast acting for high speed performance
- Low watt loss provides energy efficiency for BESS applications
- Compact NH 1XL and 3XL sizes offer flexibility

Applications

- Battery energy storage systems (BESSs)
- Power conversion systems
- Dc common bus systems
- Hybrid PV-BESS inverters
- Regenerative drives
- Industrial heaters and welding equipment
- Metal processing equipment

Specifications

Voltage Rating	Dc: 1500 V
Amperage Rating	80 A–1400 A
Interrupting Rating	Dc: 250 kA
Time Constant	1XL: </= 3 ms 3XL: </= 5 ms
Microswitch	Yes
Mounting	Bolted-blade style, DIN-blade style, Metric flush-end style
Material	Body: ceramic Contacts: plated copper (bladed) plated brass (flush end)
Approvals	cURus Recognized (File: E71611)
Applicable Standards	UL 248-13, IEC 60269-7
Environmental	RoHS Compliant, REACH
Operating Temperature	-55 °C to +125 °C
Storage Temperature	Up to +35 °C with relative humidity <65 %
Country of Origin	Mexico

Ordering Part Number

PSX 3XL UB 1400 X

Series

Case Size
1XL, 3XL

Termination
UB = bolted blade
DB = DIN blade
FL = flush-metric

Amperage

Packing Quantity
X = (1 pc/box)

Catalog Number

SERIES	CASE SIZE	TERMINATION	AMPERAGE	CATALOG NUMBER	ORDERING PART NUMBER
PSX	3XL	UB	1400	PSX3XLUB1400	PSX3XLUB1400X

Recommended Accessories

Microswitch: MSXL2000C

Web Resources

Download technical documents: **Littelfuse.com/PSX**

© 2023 Littelfuse, Inc.

Electrical Characteristics

CASE SIZE	CATALOG NUMBER			AMPERE RATING (A)	VOLTAGE RATING (V)	INTERRUPTING RATING	MINIMUM BREAKING CAPACITY (A)	MELTING (PRE-ARC) I^2T (A^2S)	TOTAL CLEARING I^2T (A^2S) AT RATED VOLTAGE	WATTS LOSS AT 100% RATED CURRENT (W)	AGENCY CERTIFICATION
	FLUSH METRIC (FL)	BOLTED BLADE (UB)	DIN BLADE (DB)		DC	DC			DC		cURus
NH 1XL	PSX1XLFL0080	PSX1XLUB0080	PSX1XLDB0080	80	1500	250 kA	800 A	2048	8720	16.4	•
	PSX1XLFL0100	PSX1XLUB0100	PSX1XLDB0100	100	1500	250 kA	1000 A	3540	15485	19.1	•
	PSX1XLFL0125	PSX1XLUB0125	PSX1XLDB0125	125	1500	250 kA	1250 A	7091	35720	19.6	•
	PSX1XLFL0160	PSX1XLUB0160	PSX1XLDB0160	160	1500	250 kA	1600 A	13704	55490	24.6	•
	PSX1XLFL0200	PSX1XLUB0200	PSX1XLDB0200	200	1500	250 kA	2000 A	18016	77240	34.6	•
	PSX1XLFL0250	PSX1XLUB0250	PSX1XLDB0250	250	1500	250 kA	2500 A	36552	156450	38.5	•
	PSX1XLFL0280	PSX1XLUB0280	PSX1XLDB0280	280	1500	250 kA	2800 A	36552	156450	48.7	•
	PSX1XLFL0315	PSX1XLUB0315	PSX1XLDB0315	315	1500	250 kA	3150 A	56940	212400	53.6	•
	PSX1XLFL0350	PSX1XLUB0350	PSX1XLDB0350	350	1500	250 kA	3500 A	86623	332050	51.8	•
	PSX1XLFL0400	PSX1XLUB0400	PSX1XLDB0400	400	1500	250 kA	4000 A	116271	352600	64.4	•
	PSX1XLFL0450	PSX1XLUB0450	PSX1XLDB0450	450	1500	250 kA	6750 A	149336	540850	69.3	•
	PSX1XLFL0500	PSX1XLUB0500	PSX1XLDB0500	500	1500	250 kA	7500 A	250109	774600	71.5	•
	PSX1XLFL0550	PSX1XLUB0550	PSX1XLDB0550	550	1500	250 kA	8250 A	276650	924967	83.1	•
	PSX1XLFL0630	PSX1XLUB0630	PSX1XLDB0630	630	1500	250 kA	9450 A	276650	924967	127.3	•
NH 3XL	PSX3XLFL0450	PSX3XLUB0450	PSX3XLDB0450	450	1500	250 kA	4500 A	57143	194500	146.3	•
	PSX3XLFL0500	PSX3XLUB0500	PSX3XLDB0500	500	1500	250 kA	5000 A	98570	333900	132.5	•
	PSX3XLFL0550	PSX3XLUB0550	PSX3XLDB0550	550	1500	250 kA	5500 A	142790	451600	136.7	•
	PSX3XLFL0630	PSX3XLUB0630	PSX3XLDB0630	630	1500	250 kA	6300 A	205617	650304	150.9	•
	PSX3XLFL0700	PSX3XLUB0700	PSX3XLDB0700	700	1500	250 kA	7000 A	305720	1003650	164.5	•
	PSX3XLFL0800	PSX3XLUB0800	PSX3XLDB0800	800	1500	250 kA	8000 A	335493	1150000	209.6	•
	PSX3XLFL0900	PSX3XLUB0900	PSX3XLDB0900	900	1500	250 kA	9000 A	403262	1308500	266.9	•
	PSX3XLFL1000	PSX3XLUB1000	PSX3XLDB1000	1000	1500	250 kA	10000 A	484792	1791500	335.0	•
	PSX3XLFL1100	PSX3XLUB1100	PSX3XLDB1100	1100	1500	250 kA	11000 A	656719	2201250	341.0	•
	PSX3XLFL1250	PSX3XLUB1250	PSX3XLDB1250	1250	1500	250 kA	12500 A	995376	3003500	346.9	•
	PSX3XLFL1400	PSX3XLUB1400	PSX3XLDB1400	1400	1500	250 kA	14000 A	1395828	4228250	361.9	•

Ordering Information

CASE SIZE	FLUSH METRIC (FL)			BOLTED BLADE (UB)			DIN BLADE (DB)			BOX QUANTITY
	CATALOG NUMBER	ORDERING PART NUMBER	UPC	CATALOG NUMBER	ORDERING PART NUMBER	UPC	CATALOG NUMBER	ORDERING PART NUMBER	UPC	
NH 1XL	PSX1XLFL0080	PSX1XLFL0080X	07945825798	PSX1XLUB0080	PSX1XLUB0080X	07945825819	PSX1XLDB0080	PSX1XLDB0080X	07945826320	1 pc/box
	PSX1XLFL0100	PSX1XLFL0100X	07945825799	PSX1XLUB0100	PSX1XLUB0100X	07945825820	PSX1XLDB0100	PSX1XLDB0100X	07945826321	1 pc/box
	PSX1XLFL0125	PSX1XLFL0125X	07945825800	PSX1XLUB0125	PSX1XLUB0125X	07945825821	PSX1XLDB0125	PSX1XLDB0125X	07945826322	1 pc/box
	PSX1XLFL0160	PSX1XLFL0160X	07945825801	PSX1XLUB0160	PSX1XLUB0160X	07945825822	PSX1XLDB0160	PSX1XLDB0160X	07945826323	1 pc/box
	PSX1XLFL0200	PSX1XLFL0200X	07945825802	PSX1XLUB0200	PSX1XLUB0200X	07945825823	PSX1XLDB0200	PSX1XLDB0200X	07945826324	1 pc/box
	PSX1XLFL0250	PSX1XLFL0250X	07945825803	PSX1XLUB0250	PSX1XLUB0250X	07945825824	PSX1XLDB0250	PSX1XLDB0250X	07945826325	1 pc/box
	PSX1XLFL0280	PSX1XLFL0280X	07945825804	PSX1XLUB0280	PSX1XLUB0280X	07945825825	PSX1XLDB0280	PSX1XLDB0280X	07945826326	1 pc/box
	PSX1XLFL0315	PSX1XLFL0315X	07945825805	PSX1XLUB0315	PSX1XLUB0315X	07945825826	PSX1XLDB0315	PSX1XLDB0315X	07945826327	1 pc/box
	PSX1XLFL0350	PSX1XLFL0350X	07945825806	PSX1XLUB0350	PSX1XLUB0350X	07945825827	PSX1XLDB0350	PSX1XLDB0350X	07945826328	1 pc/box
	PSX1XLFL0400	PSX1XLFL0400X	07945825807	PSX1XLUB0400	PSX1XLUB0400X	07945825828	PSX1XLDB0400	PSX1XLDB0400X	07945826329	1 pc/box
	PSX1XLFL0450	PSX1XLFL0450X	07945825808	PSX1XLUB0450	PSX1XLUB0450X	07945825829	PSX1XLDB0450	PSX1XLDB0450X	07945826330	1 pc/box
	PSX1XLFL0500	PSX1XLFL0500X	07945825809	PSX1XLUB0500	PSX1XLUB0500X	07945826310	PSX1XLDB0500	PSX1XLDB0500X	07945826331	1 pc/box
	PSX1XLFL0550	PSX1XLFL0550X	07945825810	PSX1XLUB0550	PSX1XLUB0550X	07945826311	PSX1XLDB0550	PSX1XLDB0550X	07945826332	1 pc/box
	PSX1XLFL0630	PSX1XLFL0630X	07945825811	PSX1XLUB0630	PSX1XLUB0630X	07945826312	PSX1XLDB0630	PSX1XLDB0630X	07945826333	1 pc/box
NH 3XL	PSX3XLFL0450	PSX3XLFL0450X	07945828641	PSX3XLUB0450	PSX3XLUB0450X	07945828645	PSX3XLDB0450	PSX3XLDB0450X	07945828649	1 pc/box
	PSX3XLFL0500	PSX3XLFL0500X	07945828642	PSX3XLUB0500	PSX3XLUB0500X	07945828646	PSX3XLDB0500	PSX3XLDB0500X	07945828650	1 pc/box
	PSX3XLFL0550	PSX3XLFL0550X	07945828643	PSX3XLUB0550	PSX3XLUB0550X	07945828647	PSX3XLDB0550	PSX3XLDB0550X	07945828651	1 pc/box
	PSX3XLFL0630	PSX3XLFL0630X	07945828644	PSX3XLUB0630	PSX3XLUB0630X	07945828648	PSX3XLDB0630	PSX3XLDB0630X	07945828652	1 pc/box
	PSX3XLFL0700	PSX3XLFL0700X	07945825812	PSX3XLUB0700	PSX3XLUB0700X	07945826313	PSX3XLDB0700	PSX3XLDB0700X	07945826334	1 pc/box
	PSX3XLFL0800	PSX3XLFL0800X	07945825813	PSX3XLUB0800	PSX3XLUB0800X	07945826314	PSX3XLDB0800	PSX3XLDB0800X	07945826335	1 pc/box
	PSX3XLFL0900	PSX3XLFL0900X	07945825814	PSX3XLUB0900	PSX3XLUB0900X	07945826315	PSX3XLDB0900	PSX3XLDB0900X	07945826336	1 pc/box
	PSX3XLFL1000	PSX3XLFL1000X	07945825815	PSX3XLUB1000	PSX3XLUB1000X	07945826316	PSX3XLDB1000	PSX3XLDB1000X	07945826337	1 pc/box
	PSX3XLFL1100	PSX3XLFL1100X	07945825816	PSX3XLUB1100	PSX3XLUB1100X	07945826317	PSX3XLDB1100	PSX3XLDB1100X	07945826338	1 pc/box
	PSX3XLFL1250	PSX3XLFL1250X	07945825817	PSX3XLUB1250	PSX3XLUB1250X	07945826318	PSX3XLDB1250	PSX3XLDB1250X	07945826339	1 pc/box
	PSX3XLFL1400	PSX3XLFL1400X	07945825818	PSX3XLUB1400	PSX3XLUB1400X	07945826319	PSX3XLDB1400	PSX3XLDB1400X	07945826340	1 pc/box

© 2023 Littelfuse, Inc.

Dimensions

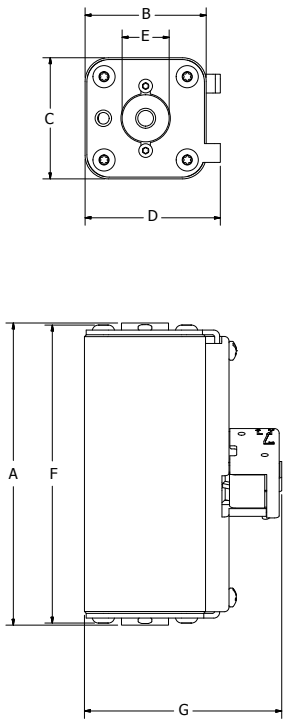

Figure 1. Flush-metric style

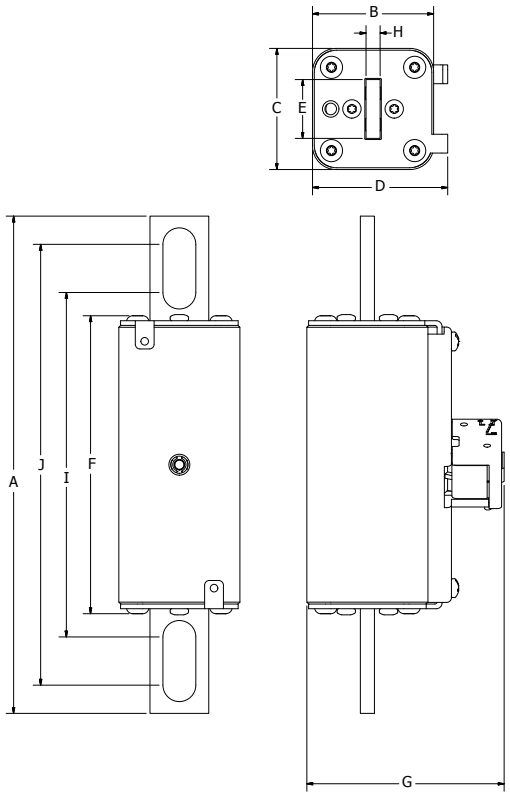

Figure 2. Bolted-blade style

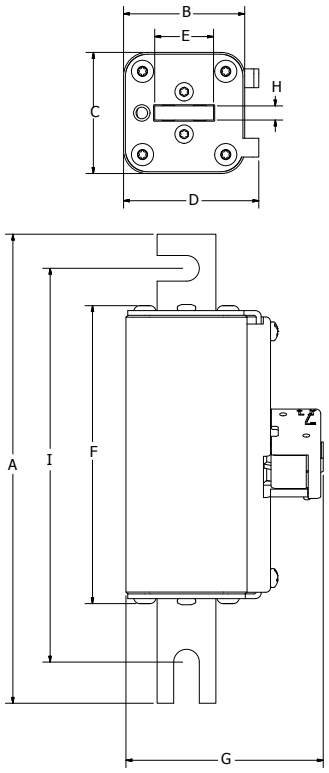

Figure 3. DIN-blade style

DIMENSIONS MM (IN)															
CASE SIZE	MOUNTING STYLE	FIGURE	A	B	C	D	E	F	G*	H	I	J	RECOMMENDED FASTENER	THREAD	RECOMMENDED TORQUE
NH 1XL	FLUSH METRIC (FL)	1	128.5 (5.06)	51.5 (2.03)	51.5 (2.03)	57.5 (2.26)	20.0 (0.79)	126.7 (4.99)	83.9 (3.30)	-	-	-	-	M8 x 1.25	13–20 Nm
	BOLTED BLADE (UB)	2	211.5 (8.33)	51.5 (2.03)	51.5 (2.03)	57.5 (2.26)	25.0 (0.98)	126.7 (4.99)	83.9 (3.30)	6.0 (0.24)	146.5 (5.77)	187.5 (7.38)	12 mm (1/2)	-	64 Nm
	DIN BLADE (DB)	3	199.5 (7.85)	51.5 (2.03)	51.5 (2.03)	57.5 (2.26)	25.0 (0.98)	126.7 (4.99)	83.9 (3.30)	6.0 (0.24)	167.5 (6.59)	-	10 mm (3/8)	-	26 Nm
NH 3XL	FLUSH METRIC (FL)	1	129.5 (5.10)	73.5 (2.89)	73.5 (2.89)	79.5 (3.13)	30.0 (1.18)	128.1 (5.04)	105.9 (4.17)	-	-	-	-	M12 x 1.75	45–55 Nm
	BOLTED BLADE (UB)	2	213.5 (8.41)	73.5 (2.89)	73.5 (2.89)	79.5 (3.13)	36.0 (1.42)	128.7 (5.07)	105.9 (4.17)	6.0 (0.24)	153.1 (6.03)	186.1 (7.33)	14 mm (9/16)	-	92 Nm
	DIN BLADE (DB)	3	199.0 (7.83)	73.5 (2.89)	73.5 (2.89)	79.5 (3.13)	36.0 (1.42)	128.7 (5.07)	105.9 (4.17)	6.0 (0.24)	166.8 (6.57)	-	10 mm (3/8)	-	26 Nm

*These dimensions include the optional bolt-on microswitch.

© 2023 Littelfuse, Inc.

POWR-*SPEED*® Fuses

PSR SERIES HIGH-SPEED SQUARE BODY

Semiconductor Fuses • Flush End • 40 A–2250 A

Description

Littelfuse PSR series high-speed square body fuses are specially designed for protection of power semiconductor devices such as diodes, triacs, IGBTs, SCRs, MOSFETs, and other solid state devices that are typically designed into power conversion and power conditioning equipment. Variable frequency drives, inverters, UPS, rectifiers, and soft-starters are examples of typical equipment designed with sensitive power semiconductor devices that cannot withstand any line surge or overcurrent conditions and require high-speed protection.

Littelfuse POWR-*SPEED* PSR series products offer optimized circuit protection at the extremely fast speed required to protect modern day power conversion devices. Such products are commonly found in numerous applications including pulp and paper industries, cranes and heavy-lifting equipment, processing industries, wastewater treatment plants, and various large factories and MRO facilities.

Features/Benefits

- Best in class dc performance
- Extremely current limiting
- Superior cycling capability
- Global certification cURus, CCC*
- Direct bus-bar mount design
- Visual and optional microswitch fuse blown indication
- Low watt-loss design
- Compliance with US and Canadian requirements
- Fast-acting Class aR performance

Applications

- Power conversion devices (UPS, inverter, rectifiers, drives)
- Dc systems (dc common bus, dc injection braking)
- Battery protection application (energy storage systems)
- Electric vehicle charging stations
- Heaters and power supplies

Specifications

Voltage Range	Ac: 450 V–1300 V Dc: 450 V–1000 V
Amperage Range	40 A–2250 A
Interrupting Range	Ac: 100 kA–200 kA Dc: 150 kA
Time Constant	10 ms at IR
Microswitch	Yes
Mounting	Flush-end style
Material	Body: ceramic Contacts: plated brass
Approvals	cURus Recognized (File: E71611) CCC (Ac voltage) *
Applicable Standards	UL248-13, IEC 60269-4 (Class aR)
Environmental	RoHS Compliant, REACH
Operating Temperature	-55 °C to +125 °C
Storage Temperature	Up to +35 °C with relative humidity <65 %
Country of Origin	Mexico

Ordering Part Number

PSR 030 FL 0550 Z

Series

Case Size
30, 31, 32, 33, 70, 71, 72, 73

Termination
FL - Flush end metric thread
FS - Flush end inches thread

Amperage

Packing Quantity
Z = (2–3 pcs/box)

Catalog Number

SERIES	CASE SIZE	TERMINATION	AMPERAGE	CATALOG NUMBER	ORDERING PART NUMBER
PSR	030	FL	0550	PSR030FL0550	PSR030FL0550Z

Recommended Accessories

Microswitch: MS3H1000C (case size 30 to 33)
MS7H1500C (case size 70 to 73)

Web Resources

Download technical documents: **Littelfuse.com/PSR**

Note: high-speed fuses are designed for fixed installations. They are not intended for use in moving vehicle applications.

* Refer to CCC section of Electrical Characteristics table

© 2023 Littelfuse, Inc.

Electrical Characteristics

CASE SIZE	CATALOG NUMBER		AMPERE RATING (A)	VOLTAGE RATING (V)			INTERRUPTING RATING		MELTING (PRE-ARC) I^2T (A^2s)	TOTAL CLEARING I^2T (A^2s) AT RATED VOLTAGE		WATT LOSS AT 100 % RATED CURRENT (W)	AGENCY CERTIFICATION	
	FLUSH END METRIC THREAD	FLUSH END INCHES THREAD		AC		DC	AC	DC		AC	DC		cURus	CCC*
				IEC	UL									
30	PSR030FL0040	PSR030FS0040	40	690	700	600	200 kA	150 kA	76	280	260	12	•	•
	PSR030FL0050	PSR030FS0050	50	690	700	600	200 kA	150 kA	110	598	384	15	•	•
	PSR030FL0063	PSR030FS0063	63	690	700	600	200 kA	150 kA	176	1023	640	20	•	•
	PSR030FL0080	PSR030FS0080	80	690	700	600	200 kA	150 kA	304	1728	1252	24	•	•
	PSR030FL0100	PSR030FS0100	100	690	700	600	200 kA	150 kA	437	2835	1575	27	•	•
	PSR030FL0125	PSR030FS0125	125	690	700	600	200 kA	150 kA	707	4684	2783	36	•	•
	PSR030FL0160	PSR030FS0160	160	690	700	600	200 kA	150 kA	1359	9114	5507	39	•	•
	PSR030FL0200	PSR030FS0200	200	690	700	600	200 kA	150 kA	3012	15169	14700	39	•	•
	PSR030FL0250	PSR030FS0250	250	690	700	600	200 kA	150 kA	4668	29952	20833	50	•	•
	PSR030FL0315	PSR030FS0315	315	690	700	600	200 kA	150 kA	7131	61830	31600	61	•	•
	PSR030FL0350	PSR030FS0350	350	690	700	600	200 kA	150 kA	12007	85320	49273	62	•	•
	PSR030FL0400	PSR030FS0400	400	690	700	600	200 kA	150 kA	16209	114750	63367	75	•	•
	PSR030FL0450	PSR030FS0450	450	690	700	600	200 kA	150 kA	23133	160110	93533	75	•	•
	PSR030FL0500	PSR030FS0500	500	690	700	600	200 kA	150 kA	31429	225180	137333	80	•	•
	PSR030FL0550	PSR030FS0550	550	690	700	600	200 kA	150 kA	44323	268920	145400	78	•	•
	PSR030FL0630	PSR030FS0630	630	690	700	550	200 kA	150 kA	57404	480010	267800	90	•	
31	PSR031FL0200	PSR031FS0200	200	690	700	600	200 kA	150 kA	1965	17334	16188	49	•	•
	PSR031FL0250	PSR031FS0250	250	690	700	600	200 kA	150 kA	3789	35343	21080	52	•	•
	PSR031FL0315	PSR031FS0315	315	690	700	600	200 kA	150 kA	6862	59130	30694	61	•	•
	PSR031FL0350	PSR031FS0350	350	690	700	600	200 kA	150 kA	9523	76140	40996	63	•	•
	PSR031FL0400	PSR031FS0400	400	690	700	600	200 kA	150 kA	14770	124335	64359	64	•	•
	PSR031FL0450	PSR031FS0450	450	690	700	600	200 kA	150 kA	22457	178200	97444	69	•	•
	PSR031FL0500	PSR031FS0500	500	690	700	600	200 kA	150 kA	29751	251505	125935	81	•	•
	PSR031FL0550	PSR031FS0550	550	690	700	600	200 kA	150 kA	42056	289170	171845	77	•	•
	PSR031FL0630	PSR031FS0630	630	690	700	600	200 kA	150 kA	45403	415500	175500	93	•	•
	PSR031FL0700	PSR031FS0700	700	690	700	600	200 kA	150 kA	98187	601425	337260	92	•	•
	PSR031FL0800	PSR031FS0800	800	690	700	600	200 kA	150 kA	137208	848880	502800	106	•	•
	PSR031FL0900	PSR031FS0900	900	550	600	550	200 kA	150 kA	155163	945100	631820	118	•	
32	PSR032FL0400	PSR032FS0400	400	690	700	600	200 kA	150 kA	11104	79650	44533	82	•	•
	PSR032FL0450	PSR032FS0450	450	690	700	600	200 kA	150 kA	15535	116100	65463	88	•	•
	PSR032FL0500	PSR032FS0500	500	690	700	600	200 kA	150 kA	21573	161460	88277	94	•	•
	PSR032FL0550	PSR032FS0550	550	690	700	600	200 kA	150 kA	26327	177660	107960	104	•	•
	PSR032FL0630	PSR032FS0630	630	690	700	600	200 kA	150 kA	34790	234900	156963	110	•	•
	PSR032FL0700	PSR032FS0700	700	690	700	600	200 kA	150 kA	51191	291870	209287	117	•	•
	PSR032FL0800	PSR032FS0800	800	690	700	600	200 kA	150 kA	60125	472770	249000	145	•	•
	PSR032FL0900	PSR032FS0900	900	690	700	600	200 kA	150 kA	107785	764100	404000	145	•	•
	PSR032FL1000	PSR032FS1000	1000	690	700	600	200 kA	150 kA	190102	933120	672333	146	•	•
	PSR032FL1100	PSR032FS1100	1100	690	700	600	200 kA	150 kA	225379	1247400	744000	149	•	•
	PSR032FL1250	PSR032FS1250	1250	550	500**	450**	200 kA	150 kA	336661	1114994	1197000	149	•	
	PSR032FL1400	PSR032FS1400	1400	450	500	450	200 kA	150 kA	551749	1611639	1865400	154	•	
	PSR032FL1500	PSR032FS1500	1500	450	500	450	200 kA	150 kA	673360	2045907	1735500	171	•	
33	PSR033FL0450	PSR033FS0450	450	690	700	600	200 kA	150 kA	13600	106380	58947	99	•	•
	PSR033FL0500	PSR033FS0500	500	690	700	600	200 kA	150 kA	16434	140400	77846	107	•	•
	PSR033FL0550	PSR033FS0550	550	690	700	600	200 kA	150 kA	23314	187650	100461	108	•	•
	PSR033FL0630	PSR033FS0630	630	690	700	600	200 kA	150 kA	38727	285930	142437	113	•	•
	PSR033FL0700	PSR033FS0700	700	690	700	600	200 kA	150 kA	56763	392580	209863	113	•	•
	PSR033FL0800	PSR033FS0800	800	690	700	600	200 kA	150 kA	84691	575505	348500	120	•	•
	PSR033FL0900	PSR033FS0900	900	690	700	600	200 kA	150 kA	122619	740340	451177	122	•	•
	PSR033FL1000	PSR033FS1000	1000	690	700	600	200 kA	150 kA	222350	1170450	787750	124	•	•
	PSR033FL1100	PSR033FS1100	1100	690	700	600	200 kA	150 kA	310824	1568700	821400	127	•	•
	PSR033FL1250	PSR033FS1250	1250	690	700	600	200 kA	150 kA	476902	2403000	1674333	131	•	•
	PSR033FL1400	PSR033FS1400	1400	690	700	500	200 kA	150 kA	583552	2920050	1979750	144	•	•
	PSR033FL1500	PSR033FS1500	1500	600	650	500	200 kA	150 kA	674538	2433200	1996733	163	•	•
	PSR033FL1600	PSR033FS1600	1600	600	650	500	200 kA	150 kA	779948	2942800	2301633	182	•	•
	PSR033FL1800	PSR033FS1800	1800	600	650	500	200 kA	150 kA	952196	3785040	2724180	224	•	•
	PSR033FL2000	PSR033FS2000	2000	550	600	500	200 kA	150 kA	1234315	4131600	3755180	222	•	•
	PSR033FL2250	PSR033FS2250	2250	500	550	450	200 kA	150 kA	1236000	4459651	3859500	299	•	

* CCC Certification only on Flush End Metric Thread Version
** PSR032 1250 A: 600 V Ac/550 V Dc

© 2023 Littelfuse, Inc.

Electrical Characteristics (cont.)

CASE SIZE	CATALOG NUMBER		AMPERE RATING (A)	VOLTAGE RATING (V)			INTERRUPTING RATING		MELTING (PRE-ARC) I^2T (A^2s)	TOTAL CLEARING I^2T (A^2s) AT RATED VOLTAGE		WATT LOSS AT 100 % RATED CURRENT (W)	AGENCY CERTIFICATION	
	FLUSH END METRIC THREAD	FLUSH END INCHES THREAD		AC		DC	AC	DC		AC	DC		cURus	CCC*
				IEC	UL									
70	PSR070FL0050	PSR070FS0050	50	1250	1300	1000	100 kA	150 kA	177	2050	400	21	•	•
	PSR070FL0063	PSR070FS0063	63	1250	1300	1000	100 kA	150 kA	273	3399	900	23	•	•
	PSR070FL0080	PSR070FS0080	80	1250	1300	1000	100 kA	150 kA	583	6732	2200	24	•	•
	PSR070FL0100	PSR070FS0100	100	1250	1300	1000	100 kA	150 kA	974	10996	3750	29	•	•
	PSR070FL0125	PSR070FS0125	125	1250	1300	1000	100 kA	150 kA	1352	13011	5150	43	•	•
	PSR070FL0160	PSR070FS0160	160	1250	1300	1000	100 kA	150 kA	2377	25662	8950	51	•	•
	PSR070FL0200	PSR070FS0200	200	1250	1300	1000	100 kA	150 kA	4177	39087	17267	61	•	•
	PSR070FL0250	PSR070FS0250	250	1250	1300	1000	100 kA	150 kA	8629	89790	36750	71	•	•
	PSR070FL0280	PSR070FS0280	280	1250	1300	1000	100 kA	150 kA	11844	113201	46750	71	•	•
	PSR070FL0315	PSR070FS0315	315	1250	1300	1000	100 kA	150 kA	18162	142051	66833	69	•	•
	PSR070FL0350	PSR070FS0350	350	1250	1200**	900**	100 kA	150 kA	22963	215230	95410	73	•	
	PSR070FL0400	PSR070FS0400	400	1100	1200	900	100 kA	150 kA	37103	283480	154320	71	•	
71	PSR071FL0160	PSR071FS0160	160	1250	1300	1000	100 kA	150 kA	2756	24600	8800	42	•	•
	PSR071FL0200	PSR071FS0200	200	1250	1300	1000	100 kA	150 kA	4918	50307	19050	52	•	•
	PSR071FL0250	PSR071FS0250	250	1250	1300	1000	100 kA	150 kA	10592	104427	43100	54	•	•
	PSR071FL0280	PSR071FS0280	280	1250	1300	1000	100 kA	150 kA	13763	131897	54150	58	•	
	PSR071FL0315	PSR071FS0315	315	1250	1300	1000	100 kA	150 kA	20882	200244	67450	60	•	•
	PSR071FL0350	PSR071FS0350	350	1250	1300	1000	100 kA	150 kA	23301	225500	102500	71	•	•
	PSR071FL0400	PSR071FS0400	400	1250	1300	1000	100 kA	150 kA	43211	374986	185000	69	•	•
	PSR071FL0450	PSR071FS0450	450	1250	1300	1000	100 kA	150 kA	55915	452394	241333	88	•	•
	PSR071FL0500	PSR071FS0500	500	1100	1200	900	100 kA	150 kA	75315	468845	253960	82	•	
	PSR071FL0550	PSR071FS0550	550	1100	1200	900	100 kA	150 kA	87328	693507	332600	90	•	
	PSR071FL0630	PSR071FS0630	630	1000	1100	900	100 kA	150 kA	131240	790862	426550	100	•	
72	PSR072FL0250	PSR072FS0250	250	1250	1300	1000	100 kA	150 kA	7737	72789	28567	63	•	•
	PSR072FL0280	PSR072FS0280	280	1250	1300	1000	100 kA	150 kA	10915	124538	46897	62	•	•
	PSR072FL0315	PSR072FS0315	315	1250	1300	1000	100 kA	150 kA	16187	145140	58867	67	•	•
	PSR072FL0350	PSR072FS0350	350	1250	1300	1000	100 kA	150 kA	18727	160447	69633	80	•	•
	PSR072FL0400	PSR072FS0400	400	1250	1300	1000	100 kA	150 kA	27112	243540	108000	89	•	•
	PSR072FL0450	PSR072FS0450	450	1250	1300	1000	100 kA	150 kA	35927	406413	159133	107	•	•
	PSR072FL0500	PSR072FS0500	500	1250	1300	1000	100 kA	150 kA	50398	425375	216333	115	•	•
	PSR072FL0550	PSR072FS0550	550	1250	1300	1000	100 kA	150 kA	73858	539833	271333	115	•	•
	PSR072FL0630	PSR072FS0630	630	1250	1300	1000	100 kA	150 kA	126126	942180	436000	119	•	•
	PSR072FL0700	PSR072FS0700	700	1100	1200	900***	100 kA	150 kA	228761	1123694	715180	115	•	
	PSR072FL0800	PSR072FS0800	800	1100	1200	900***	100 kA	150 kA	230695	1432388	911650	113	•	
	PSR072FL0900	PSR072FS0900	900	1000	900**	900***	100 kA	150 kA	376641	1309993	1030400	125	•	
	PSR072FL1000	PSR072FS1000	1000	850	900	800***	100 kA	150 kA	455955	1772548	1361500	136	•	
73	PSR073FL0315	PSR073FS0315	315	1250	1300	1000	100 kA	150 kA	10245	106600	38650	88	•	•
	PSR073FL0350	PSR073FS0350	350	1250	1300	1000	100 kA	150 kA	13586	159627	57467	96	•	•
	PSR073FL0400	PSR073FS0400	400	1250	1300	1000	100 kA	150 kA	19797	211273	86800	124	•	•
	PSR073FL0450	PSR073FS0450	450	1250	1300	1000	100 kA	150 kA	29834	279073	114333	122	•	•
	PSR073FL0500	PSR073FS0500	500	1250	1300	1000	100 kA	150 kA	42751	416437	184500	121	•	•
	PSR073FL0550	PSR073FS0550	550	1250	1300	1000	100 kA	150 kA	55513	491713	224500	130	•	•
	PSR073FL0630	PSR073FS0630	630	1250	1300	1000	100 kA	150 kA	94649	804338	377500	136	•	•
	PSR073FL0700	PSR073FS0700	700	1250	1300	1000	100 kA	150 kA	158097	1170960	575667	135	•	•
	PSR073FL0800	PSR073FS0800	800	1250	1300	1000***	100 kA	150 kA	234943	1769880	733460	123	•	
	PSR073FL0900	PSR073FS0900	900	950	1050	800***	100 kA	150 kA	317743	2280547	901779	140	•	
	PSR073FL1000	PSR073FS1000	1000	950	1050	800***	100 kA	150 kA	476221	3910801	1546418	128	•	
	PSR073FL1100	PSR073FS1100	1100	950	1050	800***	100 kA	150 kA	570870	2736600	1699000	166	•	
	PSR073FL1250	PSR073FS1250	1250	900	1000	-	100 kA	-	993924	3091160	-	182	•	
	PSR073FL1400	PSR073FS1400	1400	900	1000	-	100 kA	-	1168091	3627820	-	229	•	

* CCC Certification only on Flush End Metric Thread Version

** PSR070 350 A: 1300 V Ac/1000 V Dc
PSR072 900 A: 1100 V Ac

*** No UL certification for Dc voltage

© 2023 Littelfuse, Inc.

Ordering Information

CASE SIZE	FLUSH END - METRIC THREAD			FLUSH END - INCHES THREAD			BOX QUANTITY PCS/BOX
	CATALOG NUMBER	ORDERING PART NUMBER	UPC	CATALOG NUMBER	ORDERING PART NUMBER	UPC	
30	PSR030FL0040	PSR030FL0040Z	07945820436	PSR030FS0040	PSR030FS0040Z	07945820451	3 pcs/box
	PSR030FL0050	PSR030FL0050Z	07945820437	PSR030FS0050	PSR030FS0050Z	07945820452	3 pcs/box
	PSR030FL0063	PSR030FL0063Z	07945820438	PSR030FS0063	PSR030FS0063Z	07945820453	3 pcs/box
	PSR030FL0080	PSR030FL0080Z	07945820439	PSR030FS0080	PSR030FS0080Z	07945820454	3 pcs/box
	PSR030FL0100	PSR030FL0100Z	07945820440	PSR030FS0100	PSR030FS0100Z	07945820455	3 pcs/box
	PSR030FL0125	PSR030FL0125Z	07945820441	PSR030FS0125	PSR030FS0125Z	07945820456	3 pcs/box
	PSR030FL0160	PSR030FL0160Z	07945820442	PSR030FS0160	PSR030FS0160Z	07945820457	3 pcs/box
	PSR030FL0200	PSR030FL0200Z	07945820443	PSR030FS0200	PSR030FS0200Z	07945820458	3 pcs/box
	PSR030FL0250	PSR030FL0250Z	07945820444	PSR030FS0250	PSR030FS0250Z	07945820459	3 pcs/box
	PSR030FL0315	PSR030FL0315Z	07945820445	PSR030FS0315	PSR030FS0315Z	07945820460	3 pcs/box
	PSR030FL0350	PSR030FL0350Z	07945820446	PSR030FS0350	PSR030FS0350Z	07945820461	3 pcs/box
	PSR030FL0400	PSR030FL0400Z	07945820447	PSR030FS0400	PSR030FS0400Z	07945820462	3 pcs/box
	PSR030FL0450	PSR030FL0450Z	07945820448	PSR030FS0450	PSR030FS0450Z	07945820463	3 pcs/box
	PSR030FL0500	PSR030FL0500Z	07945820449	PSR030FS0500	PSR030FS0500Z	07945820464	3 pcs/box
	PSR030FL0550	PSR030FL0550Z	07945820450	PSR030FS0550	PSR030FS0550Z	07945820465	3 pcs/box
	PSR030FL0630	PSR030FL0630Z	07945827757	PSR030FS0630	PSR030FS0630Z	07945827778	3 pcs/box
31	PSR031FL0200	PSR031FL0200Z	07945820466	PSR031FS0200	PSR031FS0200Z	07945820477	3 pcs/box
	PSR031FL0250	PSR031FL0250Z	07945820467	PSR031FS0250	PSR031FS0250Z	07945820478	3 pcs/box
	PSR031FL0315	PSR031FL0315Z	07945820468	PSR031FS0315	PSR031FS0315Z	07945820479	3 pcs/box
	PSR031FL0350	PSR031FL0350Z	07945820469	PSR031FS0350	PSR031FS0350Z	07945820480	3 pcs/box
	PSR031FL0400	PSR031FL0400Z	07945820470	PSR031FS0400	PSR031FS0400Z	07945820481	3 pcs/box
	PSR031FL0450	PSR031FL0450Z	07945820471	PSR031FS0450	PSR031FS0450Z	07945820482	3 pcs/box
	PSR031FL0500	PSR031FL0500Z	07945820472	PSR031FS0500	PSR031FS0500Z	07945820483	3 pcs/box
	PSR031FL0550	PSR031FL0550Z	07945820473	PSR031FS0550	PSR031FS0550Z	07945820484	3 pcs/box
	PSR031FL0630	PSR031FL0630Z	07945820474	PSR031FS0630	PSR031FS0630Z	07945820485	3 pcs/box
	PSR031FL0700	PSR031FL0700Z	07945820475	PSR031FS0700	PSR031FS0700Z	07945820486	3 pcs/box
	PSR031FL0800	PSR031FL0800Z	07945820476	PSR031FS0800	PSR031FS0800Z	07945820487	3 pcs/box
	PSR031FL0900	PSR031FL0900Z	07945827758	PSR031FS0900	PSR031FS0900Z	07945827779	3 pcs/box
32	PSR032FL0400	PSR032FL0400Z	07945820488	PSR032FS0400	PSR032FS0400Z	07945820498	3 pcs/box
	PSR032FL0450	PSR032FL0450Z	07945820489	PSR032FS0450	PSR032FS0450Z	07945820499	3 pcs/box
	PSR032FL0500	PSR032FL0500Z	07945820490	PSR032FS0500	PSR032FS0500Z	07945820500	3 pcs/box
	PSR032FL0550	PSR032FL0550Z	07945820491	PSR032FS0550	PSR032FS0550Z	07945820501	3 pcs/box
	PSR032FL0630	PSR032FL0630Z	07945820492	PSR032FS0630	PSR032FS0630Z	07945820502	3 pcs/box
	PSR032FL0700	PSR032FL0700Z	07945820493	PSR032FS0700	PSR032FS0700Z	07945820503	3 pcs/box
	PSR032FL0800	PSR032FL0800Z	07945820494	PSR032FS0800	PSR032FS0800Z	07945820504	3 pcs/box
	PSR032FL0900	PSR032FL0900Z	07945820495	PSR032FS0900	PSR032FS0900Z	07945820505	3 pcs/box
	PSR032FL1000	PSR032FL1000Z	07945820496	PSR032FS1000	PSR032FS1000Z	07945820506	3 pcs/box
	PSR032FL1100	PSR032FL1100Z	07945820497	PSR032FS1100	PSR032FS1100Z	07945820507	3 pcs/box
	PSR032FL1250	PSR032FL1250Z	07945827759	PSR032FS1250	PSR032FS1250Z	07945827780	3 pcs/box
	PSR032FL1400	PSR032FL1400Z	07945827760	PSR032FS1400	PSR032FS1400Z	07945827781	3 pcs/box
	PSR032FL1500	PSR032FL1500Z	07945827761	PSR032FS1500	PSR032FS1500Z	07945827782	3 pcs/box
33	PSR033FL0450	PSR033FL0450Z	07945822163	PSR033FS0450	PSR033FS0450Z	07945822164	3 pcs/box
	PSR033FL0500	PSR033FL0500Z	07945820508	PSR033FS0500	PSR033FS0500Z	07945820522	3 pcs/box
	PSR033FL0550	PSR033FL0550Z	07945820509	PSR033FS0550	PSR033FS0550Z	07945820523	3 pcs/box
	PSR033FL0630	PSR033FL0630Z	07945820510	PSR033FS0630	PSR033FS0630Z	07945820524	3 pcs/box
	PSR033FL0700	PSR033FL0700Z	07945820511	PSR033FS0700	PSR033FS0700Z	07945820525	3 pcs/box
	PSR033FL0800	PSR033FL0800Z	07945820512	PSR033FS0800	PSR033FS0800Z	07945820526	3 pcs/box
	PSR033FL0900	PSR033FL0900Z	07945820513	PSR033FS0900	PSR033FS0900Z	07945820527	3 pcs/box
	PSR033FL1000	PSR033FL1000Z	07945820514	PSR033FS1000	PSR033FS1000Z	07945820528	3 pcs/box
	PSR033FL1100	PSR033FL1100Z	07945820515	PSR033FS1100	PSR033FS1100Z	07945820529	3 pcs/box
	PSR033FL1250	PSR033FL1250Z	07945820516	PSR033FS1250	PSR033FS1250Z	07945820530	3 pcs/box
	PSR033FL1400	PSR033FL1400Z	07945820517	PSR033FS1400	PSR033FS1400Z	07945820531	3 pcs/box
	PSR033FL1500	PSR033FL1500Z	07945820518	PSR033FS1500	PSR033FS1500Z	07945820532	3 pcs/box
	PSR033FL1600	PSR033FL1600Z	07945820519	PSR033FS1600	PSR033FS1600Z	07945820533	3 pcs/box
	PSR033FL1800	PSR033FL1800Z	07945820520	PSR033FS1800	PSR033FS1800Z	07945820534	3 pcs/box
	PSR033FL2000	PSR033FL2000Z	07945820521	PSR033FS2000	PSR033FS2000Z	07945820535	3 pcs/box
	PSR033FL2250	PSR033FL2250Z	07945827762	PSR033FS2250	PSR033FS2250Z	07945827783	3 pcs/box

© 2023 Littelfuse, Inc.

Ordering Information (cont.)

CASE SIZE	FLUSH END - METRIC THREAD			FLUSH END - INCHES THREAD			BOX QUANTITY PCS/BOX
	CATALOG NUMBER	ORDERING PART NUMBER	UPC	CATALOG NUMBER	ORDERING PART NUMBER	UPC	
70	PSR070FL0050	PSR070FL0050Z	07945820536	PSR070FS0050	PSR070FS0050Z	07945820546	2 pcs/box
	PSR070FL0063	PSR070FL0063Z	07945820537	PSR070FS0063	PSR070FS0063Z	07945820547	2 pcs/box
	PSR070FL0080	PSR070FL0080Z	07945820538	PSR070FS0080	PSR070FS0080Z	07945820548	2 pcs/box
	PSR070FL0100	PSR070FL0100Z	07945820539	PSR070FS0100	PSR070FS0100Z	07945820549	2 pcs/box
	PSR070FL0125	PSR070FL0125Z	07945820540	PSR070FS0125	PSR070FS0125Z	07945820550	2 pcs/box
	PSR070FL0160	PSR070FL0160Z	07945820541	PSR070FS0160	PSR070FS0160Z	07945820551	2 pcs/box
	PSR070FL0200	PSR070FL0200Z	07945820542	PSR070FS0200	PSR070FS0200Z	07945820552	2 pcs/box
	PSR070FL0250	PSR070FL0250Z	07945820543	PSR070FS0250	PSR070FS0250Z	07945820553	2 pcs/box
	PSR070FL0280	PSR070FL0280Z	07945820544	PSR070FS0280	PSR070FS0280Z	07945820554	2 pcs/box
	PSR070FL0315	PSR070FL0315Z	07945820545	PSR070FS0315	PSR070FS0315Z	07945820555	2 pcs/box
	PSR070FL0350	PSR070FL0350Z	07945827763	PSR070FS0350	PSR070FS0350Z	07945827784	2 pcs/box
	PSR070FL0400	PSR070FL0400Z	07945827764	PSR070FS0400	PSR070FS0400Z	07945827785	2 pcs/box
71	PSR071FL0160	PSR071FL0160Z	07945820556	PSR071FS0160	PSR071FS0160Z	07945820564	2 pcs/box
	PSR071FL0200	PSR071FL0200Z	07945820557	PSR071FS0200	PSR071FS0200Z	07945820565	2 pcs/box
	PSR071FL0250	PSR071FL0250Z	07945820558	PSR071FS0250	PSR071FS0250Z	07945820566	2 pcs/box
	PSR071FL0280	PSR071FL0280Z	07945820573	PSR071FS0280	PSR071FS0280Z	07945820582	2 pcs/box
	PSR071FL0315	PSR071FL0315Z	07945820560	PSR071FS0315	PSR071FS0315Z	07945820568	2 pcs/box
	PSR071FL0350	PSR071FL0350Z	07945820561	PSR071FS0350	PSR071FS0350Z	07945820569	2 pcs/box
	PSR071FL0400	PSR071FL0400Z	07945820562	PSR071FS0400	PSR071FS0400Z	07945820570	2 pcs/box
	PSR071FL0450	PSR071FL0450Z	07945820563	PSR071FS0450	PSR071FS0450Z	07945820571	2 pcs/box
	PSR071FL0500	PSR071FL0500Z	07945827765	PSR071FS0500	PSR071FS0500Z	07945827786	2 pcs/box
	PSR071FL0550	PSR071FL0550Z	07945827766	PSR071FS0550	PSR071FS0550Z	07945827787	2 pcs/box
	PSR071FL0630	PSR071FL0630Z	07945827767	PSR071FS0630	PSR071FS0630Z	07945827788	2 pcs/box
72	PSR072FL0250	PSR072FL0250Z	07945820572	PSR072FS0250	PSR072FS0250Z	07945820581	2 pcs/box
	PSR072FL0280	PSR072FL0280Z	07945820573	PSR072FS0280	PSR072FS0280Z	07945820582	2 pcs/box
	PSR072FL0315	PSR072FL0315Z	07945820574	PSR072FS0315	PSR072FS0315Z	07945820583	2 pcs/box
	PSR072FL0350	PSR072FL0350Z	07945820575	PSR072FS0350	PSR072FS0350Z	07945820584	2 pcs/box
	PSR072FL0400	PSR072FL0400Z	07945820576	PSR072FS0400	PSR072FS0400Z	07945820585	2 pcs/box
	PSR072FL0450	PSR072FL0450Z	07945820577	PSR072FS0450	PSR072FS0450Z	07945820586	2 pcs/box
	PSR072FL0500	PSR072FL0500Z	07945820578	PSR072FS0500	PSR072FS0500Z	07945820587	2 pcs/box
	PSR072FL0550	PSR072FL0550Z	07945820579	PSR072FS0550	PSR072FS0550Z	07945820588	2 pcs/box
	PSR072FL0630	PSR072FL0630Z	07945820580	PSR072FS0630	PSR072FS0630Z	07945820589	2 pcs/box
	PSR072FL0700	PSR072FL0700Z	07945827768	PSR072FS0700	PSR072FS0700Z	07945827789	2 pcs/box
	PSR072FL0800	PSR072FL0800Z	07945827769	PSR072FS0800	PSR072FS0800Z	07945827790	2 pcs/box
	PSR072FL0900	PSR072FL0900Z	07945827770	PSR072FS0900	PSR072FS0900Z	07945827793	2 pcs/box
	PSR072FL1000	PSR072FL1000Z	07945827771	PSR072FS1000	PSR072FS1000Z	07945827794	2 pcs/box
73	PSR073FL0315	PSR073FL0315Z	07945820590	PSR073FS0315	PSR073FS0315Z	07945820602	2 pcs/box
	PSR073FL0350	PSR073FL0350Z	07945820591	PSR073FS0350	PSR073FS0350Z	07945820603	2 pcs/box
	PSR073FL0400	PSR073FL0400Z	07945820592	PSR073FS0400	PSR073FS0400Z	07945820604	2 pcs/box
	PSR073FL0450	PSR073FL0450Z	07945820593	PSR073FS0450	PSR073FS0450Z	07945820605	2 pcs/box
	PSR073FL0500	PSR073FL0500Z	07945820594	PSR073FS0500	PSR073FS0500Z	07945820606	2 pcs/box
	PSR073FL0550	PSR073FL0550Z	07945820595	PSR073FS0550	PSR073FS0550Z	07945820607	2 pcs/box
	PSR073FL0630	PSR073FL0630Z	07945820596	PSR073FS0630	PSR073FS0630Z	07945820608	2 pcs/box
	PSR073FL0700	PSR073FL0700Z	07945820597	PSR073FS0700	PSR073FS0700Z	07945820609	2 pcs/box
	PSR073FL0800	PSR073FL0800Z	07945827772	PSR073FS0800	PSR073FS0800Z	07945827795	2 pcs/box
	PSR073FL0900	PSR073FL0900Z	07945827773	PSR073FS0900	PSR073FS0900Z	07945827796	2 pcs/box
	PSR073FL1000	PSR073FL1000Z	07945827774	PSR073FS1000	PSR073FS1000Z	07945827797	2 pcs/box
	PSR073FL1100	PSR073FL1100Z	07945827775	PSR073FS1100	PSR073FS1100Z	07945827798	2 pcs/box
	PSR073FL1250	PSR073FL1250Z	07945827776	PSR073FS1250	PSR073FS1250Z	07945827799	2 pcs/box
	PSR073FL1400	PSR073FL1400Z	07945827777	PSR073FS1400	PSR073FS1400Z	07945827800	2 pcs/box

© 2023 Littelfuse, Inc.

Dimensions

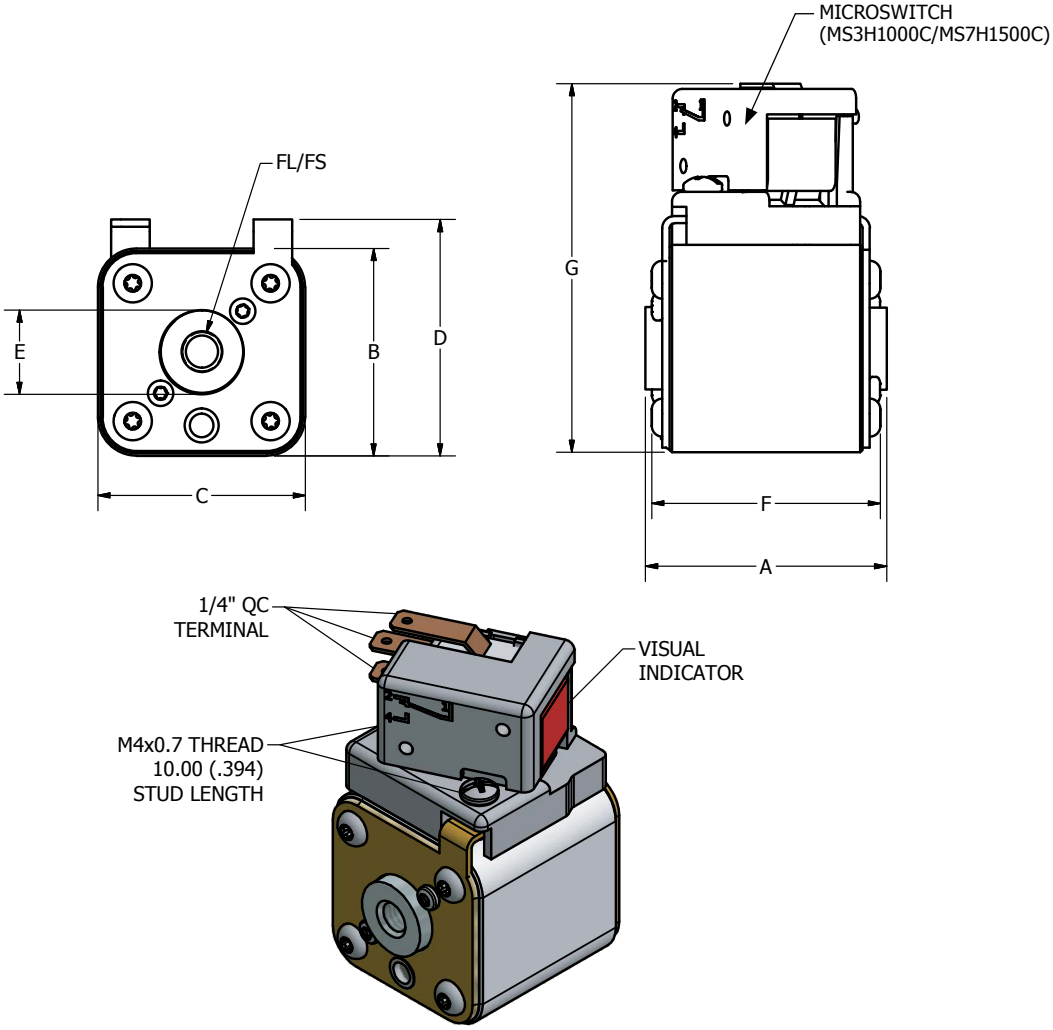

DIMENSIONS IN MM (IN)										
CASE SIZE	A	B	C	D	E	F	G	FL METRIC THREAD	FS INCHES THREAD	RECOMMENDED TORQUE
30	50.0 (1.97)	43.0 (1.69)	43.0 (1.69)	49.0 (1.93)	17.0 (0.7)	47.7 (1.88)	77.9 (3.07)	M8 x 1.25	5/16"–18 UNC 2B	13–20 Nm
31	50.0 (1.97)	51.5 (2.03)	51.5 (2.03)	57.5 (2.26)	20.0 (0.8)	48.5 (1.91)	86.4 (3.40)	M8 x 1.25	5/16"–18 UNC 2B	13–20 Nm
32	51.0 (2.01)	60.0 (2.36)	60.0 (2.36)	66.0 (2.60)	23.0 (0.9)	49.2 (1.94)	94.9 (3.74)	M10 x 1.5	3/8"–16 UNC 2B	26–35 Nm
33	51.0 (2.01)	73.5 (2.89)	73.5 (2.89)	79.5 (3.13)	30.0 (1.2)	49.5 (1.95)	108.4 (4.27)	M12 x 1.75	1/2"–13 UNC 2B	45–55 Nm
70	74.0 (2.91)	43.0 (1.69)	43.0 (1.69)	49.0 (1.93)	17.0 (0.7)	71.7 (2.82)	77.9 (3.07)	M8 x 1.25	5/16"–18 UNC 2B	13–20 Nm
71	74.0 (2.91)	51.5 (2.03)	51.5 (2.03)	57.5 (2.26)	20.0 (0.8)	72.5 (2.85)	86.4 (3.40)	M8 x 1.25	5/16"–18 UNC 2B	13–20 Nm
72	75.0 (2.95)	60.0 (2.36)	60.0 (2.36)	66.0 (2.60)	23.0 (0.9)	73.2 (2.88)	94.9 (3.736)	M10 x 1.5	3/8"–16 UNC 2B	26–35 Nm
73	75.0 (2.95)	73.5 (2.89)	73.5 (2.89)	79.5 (3.13)	30.0 (1.2)	73.5 (2.89)	108.4 (4.27)	M12 x 1.75	1/2"–13 UNC 2B	45–55 Nm

© 2023 Littelfuse, Inc.

Semiconductor Fuses • Bolted Blade • 40 A—2250 A

Description

Littelfuse PSR series high-speed square body fuses are specially designed for protection of power semiconductor devices such as diodes, triacs, IGBTs, SCRs, MOSFETs, and other solid-state devices that are typically designed into power conversion and power conditioning equipment. Variable frequency drives, inverters, UPS, rectifiers, and soft-starters are examples of typical equipment designed with sensitive power semiconductor devices that cannot withstand any line surge or overcurrent conditions and require high-speed protection.

The PSR series with bolted blades is designed and tested to IEC 60269-4.

Littelfuse POWR-*SPEED*® PSR series products offer optimized circuit protection at the extremely fast speed required to protect modern day power conversion devices. Available in bolted blade style termination (typical in North American market) with visual blown fuse indication standard on all fuses and optional micro-switch for external indication.

Features/Benefits

- Best in class dc performance
- Extremely current limiting
- Superior cycling capability
- Visual and optional microswitch fuse blown indication
- Low watt-loss design
- Compliance with US and Canadian requirements
- Fast-acting Class aR performance

Applications

- Power conversion devices (UPS, inverter, rectifiers, drives)
- Dc systems (dc common bus, dc injection braking)
- Battery protection application (energy storage systems)
- Electric vehicle charging stations
- Heaters and power supplies

Specifications

Voltage Rating	Ac: 450 V–1300 V
	Dc: 450 V–1000 V
Amperage Rating	40 A–2250 A
Interrupting Rating	Ac: 100 kA–200 kA
	Dc: 150 kA
Time Constant	10 ms at IR
Microswitch	Yes
Mounting	Bolted blade style
Material	Body: ceramic
	Contacts: plated copper
Approvals	cURus Recognized (File: E71611)
Applicable Standards	UL 248-13 IEC 60269-4 (Class aR)
Environmental	RoHS Compliant, REACH
Operating Temperature	-55 °C to +125 °C
Storage Temperature	Up to +35 °C with relative humidity <65 %
Country of Origin	Mexico

Ordering Part Number

PSR 030 US 0550 Z

Series

Case Size
30, 31, 32, 33, 70, 71, 72, 73

Termination
US = bolted short blade
UL = bolted long blade

Amperage

Packing Quantity
X = (1 pc/box)
Z = (3 pcs/box)

Catalog Number

SERIES	CASE SIZE	TERMINATION	AMPERAGE	CATALOG NUMBER	ORDERING PART NUMBER
PSR	030	US	0550	PSR030US0550	PSR030US0550Z

Recommended Accessories

Microswitch: MS3H1000C (Case Size 30 to 33)
MS7H1500C (Case Size 70 to 73)

Web Resources

Download technical documents: **Littelfuse.com/PSR**
Note: high-speed fuses are designed for fixed installations. They are not intended for use in moving vehicle applications.

© 2023 Littelfuse, Inc.

Electrical Characteristics

CASE SIZE	CATALOG NUMBER		AMPERE RATING (A)	VOLTAGE RATING (V)			INTERRUPTING RATING		MELTING (PRE-ARC) I^2T (A^2S)	TOTAL CLEARING I^2T (A^2S) AT RATED VOLTAGE		WATT LOSS AT 100 % RATED CURRENT (W)	AGENCY CERTIFICATION
	BOLTED SHORT BLADE (US)	BOLTED LONG BLADE (UL)		AC		DC	AC	DC		AC	DC		cURus
				IEC	UL								
30	PSR030US0040	PSR030UL0040	40	690	700	600	200 kA	150 kA	76	280	260	13	•
	PSR030US0050	PSR030UL0050	50	690	700	600	200 kA	150 kA	110	598	384	16	•
	PSR030US0063	PSR030UL0063	63	690	700	600	200 kA	150 kA	176	1023	640	20	•
	PSR030US0080	PSR030UL0080	80	690	700	600	200 kA	150 kA	304	1728	1252	24	•
	PSR030US0100	PSR030UL0100	100	690	700	600	200 kA	150 kA	437	2835	1575	28	•
	PSR030US0125	PSR030UL0125	125	690	700	600	200 kA	150 kA	707	4684	2783	37	•
	PSR030US0160	PSR030UL0160	160	690	700	600	200 kA	150 kA	1359	9114	5507	40	•
	PSR030US0200	PSR030UL0200	200	690	700	600	200 kA	150 kA	3012	15169	14700	40	•
	PSR030US0250	PSR030UL0250	250	690	700	600	200 kA	150 kA	4668	29952	20833	52	•
	PSR030US0315	PSR030UL0315	315	690	700	600	200 kA	150 kA	7131	61830	31600	64	•
	PSR030US0350	PSR030UL0350	350	690	700	600	200 kA	150 kA	12007	85320	49273	66	•
	PSR030US0400	PSR030UL0400	400	690	700	600	200 kA	150 kA	16209	114750	63367	78	•
	PSR030US0450	PSR030UL0450	450	690	700	600	200 kA	150 kA	23133	160110	93533	80	•
	PSR030US0500	PSR030UL0500	500	690	700	600	200 kA	150 kA	31429	225180	137333	84	•
	PSR030US0550	PSR030UL0550	550	690	700	600	200 kA	150 kA	44323	268920	145400	85	•
	PSR030US0630	PSR030UL0630	630	690	700	550	200 kA	150 kA	57404	480010	267800	91	•
31	PSR031US0200	PSR031UL0200	200	690	700	600	200 kA	150 kA	1965	17334	16188	49	•
	PSR031US0250	PSR031UL0250	250	690	700	600	200 kA	150 kA	3789	35343	21080	52	•
	PSR031US0315	PSR031UL0315	315	690	700	600	200 kA	150 kA	6862	59130	30694	63	•
	PSR031US0350	PSR031UL0350	350	690	700	600	200 kA	150 kA	9523	76140	40996	67	•
	PSR031US0400	PSR031UL0400	400	690	700	600	200 kA	150 kA	14770	124335	64359	70	•
	PSR031US0450	PSR031UL0450	450	690	700	600	200 kA	150 kA	22457	178200	97444	70	•
	PSR031US0500	PSR031UL0500	500	690	700	600	200 kA	150 kA	29751	251505	125935	74	•
	PSR031US0550	PSR031UL0550	550	690	700	600	200 kA	150 kA	42056	289170	171845	86	•
	PSR031US0630	PSR031UL0630	630	690	700	600	200 kA	150 kA	73513	507465	276315	87	•
	PSR031US0700	PSR031UL0700	700	690	700	600	200 kA	150 kA	98187	601425	337260	93	•
	PSR031US0800	PSR031UL0800	800	690	700	600	200 kA	150 kA	137208	848880	502815	107	•
	PSR031US0900	PSR031UL0900	900	550	600	550	200 kA	150 kA	155163	945100	631820	126	•
32	PSR032US0400	PSR032UL0400	400	690	700	600	200 kA	150 kA	11104	79650	44533	87	•
	PSR032US0450	PSR032UL0450	450	690	700	600	200 kA	150 kA	15535	116100	65463	88	•
	PSR032US0500	PSR032UL0500	500	690	700	600	200 kA	150 kA	21573	161460	88277	94	•
	PSR032US0550	PSR032UL0550	550	690	700	600	200 kA	150 kA	26327	177660	107960	106	•
	PSR032US0630	PSR032UL0630	630	690	700	600	200 kA	150 kA	34790	234900	156963	114	•
	PSR032US0700	PSR032UL0700	700	690	700	600	200 kA	150 kA	51191	291870	209287	127	•
	PSR032US0800	PSR032UL0800	800	690	700	600	200 kA	150 kA	60125	472770	249000	152	•
	PSR032US0900	PSR032UL0900	900	690	700	600	200 kA	150 kA	107785	764100	404000	145	•
	PSR032US1000	PSR032UL1000	1000	690	700	600	200 kA	150 kA	190102	933120	672333	149	•
	PSR032US1100	PSR032UL1100	1100	690	700	600	200 kA	150 kA	225379	1247400	744000	161	•
	PSR032US1250	PSR032UL1250	1250	550	500*	450*	200 kA	150 kA	336661	1114994	1197000	166	•
	PSR032US1400	PSR032UL1400	1400	450	500	450	200 kA	150 kA	551749	1611639	1865400	184	•
	PSR032US1500	PSR032UL1500	1500	450	500	450	200 kA	150 kA	673360	2045907	1735500	192	•
33	PSR033US0450	PSR033UL0450	450	690	700	600	200 kA	150 kA	13600	106380	58947	107	•
	PSR033US0500	PSR033UL0500	500	690	700	600	200 kA	150 kA	16434	140400	77846	107	•
	PSR033US0550	PSR033UL0550	550	690	700	600	200 kA	150 kA	23314	187650	100461	111	•
	PSR033US0630	PSR033UL0630	630	690	700	600	200 kA	150 kA	38727	285930	142437	120	•
	PSR033US0700	PSR033UL0700	700	690	700	600	200 kA	150 kA	56763	392580	209863	116	•
	PSR033US0800	PSR033UL0800	800	690	700	600	200 kA	150 kA	84691	575505	348500	122	•
	PSR033US0900	PSR033UL0900	900	690	700	600	200 kA	150 kA	122619	740340	451177	138	•
	PSR033US1000	PSR033UL1000	1000	690	700	600	200 kA	150 kA	222350	1170450	787750	138	•
	PSR033US1100	PSR033UL1100	1100	690	700	600	200 kA	150 kA	310824	1568700	821400	138	•
	PSR033US1250	PSR033UL1250	1250	690	700	500	200 kA	150 kA	476902	2403000	1674333	145	•
	PSR033US1400	PSR033UL1400	1400	690	700	500	200 kA	150 kA	583552	2920050	1979750	173	•
	PSR033US1500	PSR033UL1500	1500	600	650	500	200 kA	150 kA	674538	2433200	1996733	182	•
	PSR033US1600	PSR033UL1600	1600	600	650	500	200 kA	150 kA	779948	2942800	2301633	208	•
	PSR033US1800	PSR033UL1800	1800	600	650	500	200 kA	150 kA	952196	3785040	2724180	260	•
	PSR033US2000	PSR033UL2000	2000	550	600	480	200 kA	150 kA	1234315	4131600	3755180	264	•
	PSR033US2250	PSR033UL2250	2250	500	550	450	200 kA	150 kA	1236000	4459651	3859500	349	•

* PSR032 1250 A: 600 V Ac/550 V Dc

© 2023 Littelfuse, Inc.

Electrical Characteristics (cont.)

CASE SIZE	CATALOG NUMBER	AMPERE RATING (A)	VOLTAGE RATING (V)			INTERRUPTING RATING		MELTING (PRE-ARC) I^2T (A^2S)	TOTAL CLEARING I^2T (A^2S) AT RATED VOLTAGE		WATT LOSS AT 100 % RATED CURRENT (W)	AGENCY CERTIFICATION
	BOLTED LONG BLADE (UL)		AC		DC	AC	DC		AC	DC		cURus
			IEC	UL								
70	PSR070UL0050	50	1250	1300	1000	100 kA	150 kA	177	2050	400	21	•
	PSR070UL0063	63	1250	1300	1000	100 kA	150 kA	273	3399	900	24	•
	PSR070UL0080	80	1250	1300	1000	100 kA	150 kA	583	6732	2200	25	•
	PSR070UL0100	100	1250	1300	1000	100 kA	150 kA	974	10996	3750	30	•
	PSR070UL0125	125	1250	1300	1000	100 kA	150 kA	1352	13011	5150	44	•
	PSR070UL0160	160	1250	1300	1000	100 kA	150 kA	2377	25662	8950	53	•
	PSR070UL0200	200	1250	1300	1000	100 kA	150 kA	4177	39087	17267	62	•
	PSR070UL0250	250	1250	1300	1000	100 kA	150 kA	8629	89790	36750	73	•
	PSR070UL0280	280	1250	1300	1000	100 kA	150 kA	11844	113201	46750	77	•
	PSR070UL0315	315	1250	1300	1000	100 kA	150 kA	18162	142051	66833	80	•
	PSR070UL0350	350	1250	1200*	900*	100 kA	150 kA	22963	215230	95410	76	•
	PSR070UL0400	400	1100	1200	900	100 kA	150 kA	37103	283480	154320	78	•
71	PSR071UL0160	160	1250	1300	1000	100 kA	150 kA	2756	24600	8800	45	•
	PSR071UL0200	200	1250	1300	1000	100 kA	150 kA	4918	50307	19050	52	•
	PSR071UL0250	250	1250	1300	1000	100 kA	150 kA	10592	104427	43100	55	•
	PSR071UL0280	280	1250	1300	1000	100 kA	150 kA	13763	131897	54150	58	•
	PSR071UL0315	315	1250	1300	1000	100 kA	150 kA	20882	200244	67450	59	•
	PSR071UL0350	350	1250	1300	1000	100 kA	150 kA	23301	225500	102500	70	•
	PSR071UL0400	400	1250	1300	1000	100 kA	150 kA	43211	374986	185000	76	•
	PSR071UL0450	450	1250	1300	1000	100 kA	150 kA	55915	452394	241333	88	•
	PSR071UL0500	500	1100	1200	900	100 kA	150 kA	75315	468845	253960	93	•
	PSR071UL0550	550	1100	1200	900	100 kA	150 kA	87328	693507	332600	90	•
	PSR071UL0630	630	1000	1100	900	100 kA	150 kA	131240	790862	426550	103	•
72	PSR072UL0250	250	1250	1300	1000	100 kA	150 kA	7737	72789	28567	64	•
	PSR072UL0280	280	1250	1300	1000	100 kA	150 kA	10915	124538	46897	62	•
	PSR072UL0315	315	1250	1300	1000	100 kA	150 kA	16187	145140	58867	69	•
	PSR072UL0350	350	1250	1300	1000	100 kA	150 kA	18727	160447	69633	81	•
	PSR072UL0400	400	1250	1300	1000	100 kA	150 kA	27112	243540	108000	93	•
	PSR072UL0450	450	1250	1300	1000	100 kA	150 kA	35927	406413	159133	107	•
	PSR072UL0500	500	1250	1300	1000	100 kA	150 kA	50398	425375	216333	115	•
	PSR072UL0550	550	1250	1300	1000	100 kA	150 kA	73858	539833	271333	115	•
	PSR072UL0630	630	1250	1300	1000	100 kA	150 kA	126126	942180	436000	119	•
	PSR072UL0700	700	1100	1200	900**	100 kA	150 kA	228761	1123694	715180	89	•
	PSR072UL0800	800	1100	1200	900**	100 kA	150 kA	230695	1432388	911650	129	•
	PSR072UL0900	900	1000	900*	900**	100 kA	150 kA	376641	1309993	1030400	131	•
	PSR072UL1000	1000	850	900	800**	100 kA	150 kA	455955	1772548	1361500	156	•
73	PSR073UL0315	315	1250	1300	1000	100 kA	150 kA	10245	106600	38650	100	•
	PSR073UL0350	350	1250	1300	1000	100 kA	150 kA	13586	159627	57467	100	•
	PSR073UL0400	400	1250	1300	1000	100 kA	150 kA	19797	211273	86800	124	•
	PSR073UL0450	450	1250	1300	1000	100 kA	150 kA	29834	279073	114333	122	•
	PSR073UL0500	500	1250	1300	1000	100 kA	150 kA	42751	416437	184500	121	•
	PSR073UL0550	550	1250	1300	1000	100 kA	150 kA	55513	491713	224500	130	•
	PSR073UL0630	630	1250	1300	1000	100 kA	150 kA	94649	804338	377500	136	•
	PSR073UL0700	700	1250	1300	1000	100 kA	150 kA	158097	1170960	575667	135	•
	PSR073UL0800	800	1250	1300	1000**	100 kA	150 kA	234943	1769880	733460	128	•
	PSR073UL0900	900	950	1050	800**	100 kA	150 kA	317743	2280547	901779	156	•
	PSR073UL1000	1000	950	1050	800**	100 kA	150 kA	476221	3910801	1546418	143	•
	PSR073UL1100	1100	950	1050	800**	100 kA	150 kA	570870	2736600	1699000	165	•
	PSR073UL1250	1250	900	1000	-	100 kA	-	993924	3091160	-	197	•
	PSR073UL1400	1400	900	1000	-	100 kA	-	1168091	3627820	-	249	•

* PSR070 350 A: 1300 V Ac/1000 V Dc
PSR072 900 A: 1100 V Ac
** No UL certification for Dc voltage

© 2023 Littelfuse, Inc.

Ordering Information

CASE SIZE	BOLTED SHORT BLADE (US)			BOLTED LONG BLADE (UL)			BOX QUANTITY
	CATALOG NUMBER	ORDERING PART NUMBER	UPC	CATALOG NUMBER	ORDERING PART NUMBER	UPC	
30	PSR030US0040	PSR030US0040Z	07945825195	PSR030UL0040	PSR030UL0040Z	07945825246	3 pcs/box
	PSR030US0050	PSR030US0050Z	07945825196	PSR030UL0050	PSR030UL0050Z	07945825247	3 pcs/box
	PSR030US0063	PSR030US0063Z	07945825197	PSR030UL0063	PSR030UL0063Z	07945825248	3 pcs/box
	PSR030US0080	PSR030US0080Z	07945825198	PSR030UL0080	PSR030UL0080Z	07945825249	3 pcs/box
	PSR030US0100	PSR030US0100Z	07945825199	PSR030UL0100	PSR030UL0100Z	07945825250	3 pcs/box
	PSR030US0125	PSR030US0125Z	07945825200	PSR030UL0125	PSR030UL0125Z	07945825251	3 pcs/box
	PSR030US0160	PSR030US0160Z	07945825201	PSR030UL0160	PSR030UL0160Z	07945825252	3 pcs/box
	PSR030US0200	PSR030US0200Z	07945825202	PSR030UL0200	PSR030UL0200Z	07945825253	3 pcs/box
	PSR030US0250	PSR030US0250Z	07945825203	PSR030UL0250	PSR030UL0250Z	07945825254	3 pcs/box
	PSR030US0315	PSR030US0315Z	07945825204	PSR030UL0315	PSR030UL0315Z	07945825255	3 pcs/box
	PSR030US0350	PSR030US0350Z	07945825205	PSR030UL0350	PSR030UL0350Z	07945825256	3 pcs/box
	PSR030US0400	PSR030US0400Z	07945825206	PSR030UL0400	PSR030UL0400Z	07945825257	3 pcs/box
	PSR030US0450	PSR030US0450Z	07945825207	PSR030UL0450	PSR030UL0450Z	07945825258	3 pcs/box
	PSR030US0500	PSR030US0500Z	07945825208	PSR030UL0500	PSR030UL0500Z	07945825259	3 pcs/box
	PSR030US0550	PSR030US0550Z	07945825209	PSR030UL0550	PSR030UL0550Z	07945825260	3 pcs/box
	PSR030US0630	PSR030US0630Z	07945828549	PSR030UL0630	PSR030UL0630Z	07945827828	3 pcs/box
31	PSR031US0200	PSR031US0200Z	07945825210	PSR031UL0200	PSR031UL0200Z	07945825261	3 pcs/box
	PSR031US0250	PSR031US0250Z	07945825211	PSR031UL0250	PSR031UL0250Z	07945825262	3 pcs/box
	PSR031US0315	PSR031US0315Z	07945825212	PSR031UL0315	PSR031UL0315Z	07945825263	3 pcs/box
	PSR031US0350	PSR031US0350Z	07945825213	PSR031UL0350	PSR031UL0350Z	07945825264	3 pcs/box
	PSR031US0400	PSR031US0400Z	07945825214	PSR031UL0400	PSR031UL0400Z	07945825265	3 pcs/box
	PSR031US0450	PSR031US0450Z	07945825215	PSR031UL0450	PSR031UL0450Z	07945825266	3 pcs/box
	PSR031US0500	PSR031US0500Z	07945825216	PSR031UL0500	PSR031UL0500Z	07945825267	3 pcs/box
	PSR031US0550	PSR031US0550Z	07945825217	PSR031UL0550	PSR031UL0550Z	07945825268	3 pcs/box
	PSR031US0630	PSR031US0630Z	07945825218	PSR031UL0630	PSR031UL0630Z	07945825269	3 pcs/box
	PSR031US0700	PSR031US0700Z	07945825219	PSR031UL0700	PSR031UL0700Z	07945825270	3 pcs/box
	PSR031US0800	PSR031US0800Z	07945825220	PSR031UL0800	PSR031UL0800Z	07945825271	3 pcs/box
	PSR031US0900	PSR031US0900Z	07945828550	PSR031UL0900	PSR031UL0900Z	07945827829	3 pcs/box
32	PSR032US0400	PSR032US0400X	07945825221	PSR032UL0400	PSR032UL0400X	07945825272	1 pc/box
	PSR032US0450	PSR032US0450X	07945825222	PSR032UL0450	PSR032UL0450X	07945825273	1 pc/box
	PSR032US0500	PSR032US0500X	07945825223	PSR032UL0500	PSR032UL0500X	07945825274	1 pc/box
	PSR032US0550	PSR032US0550X	07945825224	PSR032UL0550	PSR032UL0550X	07945825275	1 pc/box
	PSR032US0630	PSR032US0630X	07945825225	PSR032UL0630	PSR032UL0630X	07945825276	1 pc/box
	PSR032US0700	PSR032US0700X	07945825226	PSR032UL0700	PSR032UL0700X	07945825277	1 pc/box
	PSR032US0800	PSR032US0800X	07945825227	PSR032UL0800	PSR032UL0800X	07945825278	1 pc/box
	PSR032US0900	PSR032US0900X	07945825228	PSR032UL0900	PSR032UL0900X	07945825279	1 pc/box
	PSR032US1000	PSR032US1000X	07945825229	PSR032UL1000	PSR032UL1000X	07945825280	1 pc/box
	PSR032US1100	PSR032US1100X	07945825230	PSR032UL1100	PSR032UL1100X	07945825281	1 pc/box
	PSR032US1250	PSR032US1250X	07945828551	PSR032UL1250	PSR032UL1250X	07945827830	1 pc/box
	PSR032US1400	PSR032US1400X	07945828552	PSR032UL1400	PSR032UL1400X	07945828531	1 pc/box
	PSR032US1500	PSR032US1500X	07945828553	PSR032UL1500	PSR032UL1500X	07945828532	1 pc/box
33	PSR033US0450	PSR033US0450X	07945825231	PSR033UL0450	PSR033UL0450X	07945825282	1 pc/box
	PSR033US0500	PSR033US0500X	07945825232	PSR033UL0500	PSR033UL0500X	07945825283	1 pc/box
	PSR033US0550	PSR033US0550X	07945825233	PSR033UL0550	PSR033UL0550X	07945825284	1 pc/box
	PSR033US0630	PSR033US0630X	07945825234	PSR033UL0630	PSR033UL0630X	07945825285	1 pc/box
	PSR033US0700	PSR033US0700X	07945825235	PSR033UL0700	PSR033UL0700X	07945825286	1 pc/box
	PSR033US0800	PSR033US0800X	07945825236	PSR033UL0800	PSR033UL0800X	07945825287	1 pc/box
	PSR033US0900	PSR033US0900X	07945825237	PSR033UL0900	PSR033UL0900X	07945825288	1 pc/box
	PSR033US1000	PSR033US1000X	07945825238	PSR033UL1000	PSR033UL1000X	07945825289	1 pc/box
	PSR033US1100	PSR033US1100X	07945825239	PSR033UL1100	PSR033UL1100X	07945825290	1 pc/box
	PSR033US1250	PSR033US1250X	07945825240	PSR033UL1250	PSR033UL1250X	07945825291	1 pc/box
	PSR033US1400	PSR033US1400X	07945825241	PSR033UL1400	PSR033UL1400X	07945825292	1 pc/box
	PSR033US1500	PSR033US1500X	07945825242	PSR033UL1500	PSR033UL1500X	07945825293	1 pc/box
	PSR033US1600	PSR033US1600X	07945825243	PSR033UL1600	PSR033UL1600X	07945825294	1 pc/box
	PSR033US1800	PSR033US1800X	07945825244	PSR033UL1800	PSR033UL1800X	07945825295	1 pc/box
	PSR033US2000	PSR033US2000X	07945825245	PSR033UL2000	PSR033UL2000X	07945825296	1 pc/box
	PSR033US2250	PSR033US2250X	07945828554	PSR033UL2250	PSR033UL2250X	07945828533	1 pc/box

© 2023 Littelfuse, Inc.

Ordering Information (cont.)

CASE SIZE	BOLTED LONG BLADE (UL)			BOX QUANTITY
	CATALOG NUMBER	ORDERING PART NUMBER	UPC	
70	PSR070UL0050	PSR070UL0050Z	07945825297	3 pcs/box
	PSR070UL0063	PSR070UL0063Z	07945825298	3 pcs/box
	PSR070UL0080	PSR070UL0080Z	07945825299	3 pcs/box
	PSR070UL0100	PSR070UL0100Z	07945825300	3 pcs/box
	PSR070UL0125	PSR070UL0125Z	07945825301	3 pcs/box
	PSR070UL0160	PSR070UL0160Z	07945825302	3 pcs/box
	PSR070UL0200	PSR070UL0200Z	07945825303	3 pcs/box
	PSR070UL0250	PSR070UL0250Z	07945825304	3 pcs/box
	PSR070UL0280	PSR070UL0280Z	07945825305	3 pcs/box
	PSR070UL0315	PSR070UL0315Z	07945825306	3 pcs/box
	PSR070UL0350	PSR070UL0350Z	07945828534	3 pcs/box
	PSR070UL0400	PSR070UL0400Z	07945828535	3 pcs/box
71	PSR071UL0160	PSR071UL0160Z	07945825307	3 pcs/box
	PSR071UL0200	PSR071UL0200Z	07945825308	3 pcs/box
	PSR071UL0250	fPSR071UL0250Z	07945825309	3 pcs/box
	PSR071UL0280	PSR071UL0280Z	07945825310	3 pcs/box
	PSR071UL0315	PSR071UL0315Z	07945825311	3 pcs/box
	PSR071UL0350	PSR071UL0350Z	07945825312	3 pcs/box
	PSR071UL0400	PSR071UL0400Z	07945825313	3 pcs/box
	PSR071UL0450	PSR071UL0450Z	07945825314	3 pcs/box
	PSR071UL0500	PSR071UL0500Z	07945828536	3 pcs/box
	PSR071UL0550	PSR071UL0550Z	07945828537	3 pcs/box
	PSR071UL0630	PSR071UL0630Z	07945828538	3 pcs/box
72	PSR072UL0250	PSR072UL0250X	07945825315	1 pc/box
	PSR072UL0280	PSR072UL0280X	07945825316	1 pc/box
	PSR072UL0315	PSR072UL0315X	07945825317	1 pc/box
	PSR072UL0350	PSR072UL0350X	07945825318	1 pc/box
	PSR072UL0400	PSR072UL0400X	07945825319	1 pc/box
	PSR072UL0450	PSR072UL0450X	07945825320	1 pc/box
	PSR072UL0500	PSR072UL0500X	07945825321	1 pc/box
	PSR072UL0550	PSR072UL0550X	07945825322	1 pc/box
	PSR072UL0630	PSR072UL0630X	07945825323	1 pc/box
	PSR072UL0700	PSR072UL0700X	07945828539	1 pc/box
	PSR072UL0800	PSR072UL0800X	07945828540	1 pc/box
	PSR072UL0900	PSR072UL0900X	07945828541	1 pc/box
	PSR072UL1000	PSR072UL1000X	07945828542	1 pc/box
73	PSR073UL0315	PSR073UL0315X	07945825324	1 pc/box
	PSR073UL0350	PSR073UL0350X	07945825325	1 pc/box
	PSR073UL0400	PSR073UL0400X	07945825326	1 pc/box
	PSR073UL0450	PSR073UL0450X	07945825327	1 pc/box
	PSR073UL0500	PSR073UL0500X	07945825328	1 pc/box
	PSR073UL0550	PSR073UL0550X	07945825329	1 pc/box
	PSR073UL0630	PSR073UL0630X	07945825330	1 pc/box
	PSR073UL0700	PSR073UL0700X	07945825331	1 pc/box
	PSR073UL0800	PSR073UL0800X	07945828543	1 pc/box
	PSR073UL0900	PSR073UL0900X	07945828544	1 pc/box
	PSR073UL1000	PSR073UL1000X	07945828545	1 pc/box
	PSR073UL1100	PSR073UL1100X	07945828546	1 pc/box
	PSR073UL1250	PSR073UL1250X	07945828547	1 pc/box
	PSR073UL1400	PSR073UL1400X	07945828548	1 pc/box

© 2023 Littelfuse, Inc.

Dimensions (US and UL)

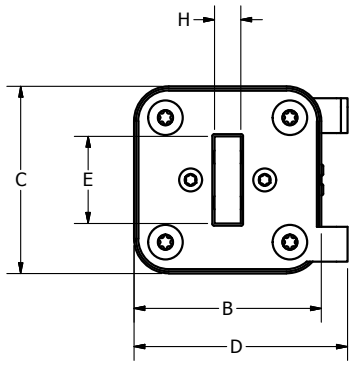

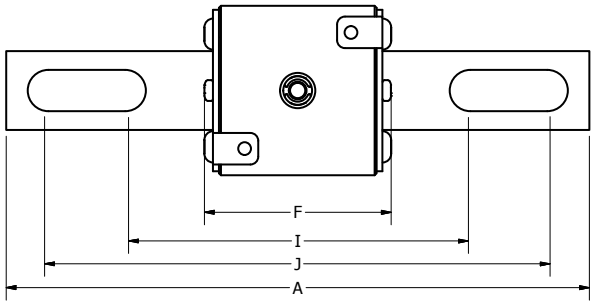

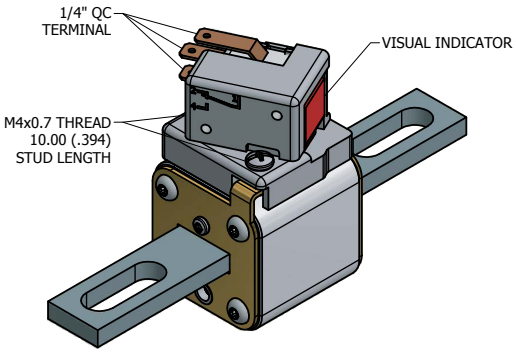

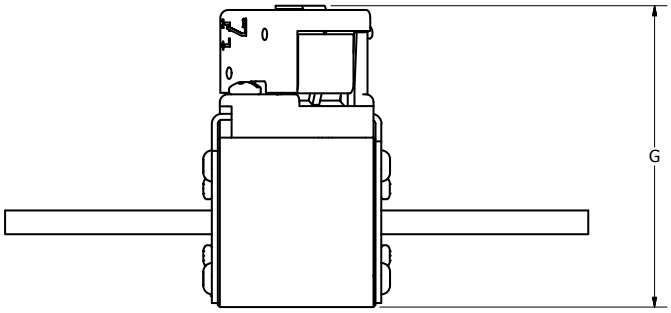

DIMENSIONS MM (IN)													
CASE SIZE	MOUNTING STYLE	A	B	C	D	E	F	G	H	I	J	RECOMMENDED FASTENER	TIGHTENING TORQUE (REFERENCE ONLY)
30	Short [US]	127.2 (5.01)	43.0 (1.69)	43.0 (1.69)	49.0 (1.93)	20.0 (0.79)	47.7 (1.88)	77.9 (3.07)	6.0 (0.24)	69.5 (2.74)	106.3 (4.19)	10 mm (3/8)	26 Nm
	Long [UL]	148.0 (5.83)	43.0 (1.69)	43.0 (1.69)	49.0 (1.93)	20.0 (0.79)	47.7 (1.88)	77.9 (3.07)	6.0 (0.24)	88.5 (3.48)	125.8 (4.95)	10 mm (3/8)	26 Nm
31	Short [US]	133.2 (5.24)	51.5 (2.03)	51.5 (2.03)	57.5 (2.26)	25.0 (0.98)	49.2 (1.94)	86.4 (3.40)	6.0 (0.24)	68.8 (2.71)	108.3 (4.26)	12 mm (1/2)	64 Nm
	Long [UL]	153.2 (6.03)	51.5 (2.03)	51.5 (2.03)	57.5 (2.26)	25.0 (0.98)	49.2 (1.94)	86.4 (3.40)	6.0 (0.24)	92.3 (3.63)	128.3 (5.05)	12 mm (1/2)	64 Nm
32	Short [US]	133.2 (5.24)	60.0 (2.36)	60.0 (2.36)	66.0 (2.60)	25.0 (0.98)	49.2 (1.94)	94.9 (3.74)	6.0 (0.24)	68.8 (2.71)	108.3 (4.26)	12 mm (1/2)	64 Nm
	Long [UL]	153.2 (6.03)	60.0 (2.36)	60.0 (2.36)	66.0 (2.60)	25.0 (0.98)	49.2 (1.94)	94.9 (3.74)	6.0 (0.24)	92.3 (3.63)	128.3 (5.05)	12 mm (1/2)	64 Nm
33	Short [US]	135.4 (5.33)	73.5 (2.89)	73.5 (2.89)	79.5 (3.13)	36.0 (1.42)	50.2 (1.98)	108.4 (4.27)	6.0 (0.24)	75.8 (2.98)	107.3 (4.22)	14 mm (9/16)	92 Nm
	Long [UL]	155.2 (6.11)	73.5 (2.89)	73.5 (2.89)	79.5 (3.13)	36.0 (1.42)	50.2 (1.98)	108.4 (4.27)	6.0 (0.24)	94.8 (3.73)	126.3 (4.97)	14 mm (9/16)	92 Nm
70	Long [UL]	151.2 (5.95)	43.0 (1.69)	43.0 (1.69)	49.0 (1.93)	20.0 (0.79)	71.7 (2.82)	77.9 (3.07)	6.0 (0.24)	92.8 (3.65)	130.3 (5.13)	10 mm (3/8)	26 Nm
71	Long [UL]	157.2 (6.19)	51.5 (2.03)	51.5 (2.03)	57.5 (2.26)	25.0 (0.98)	73.2 (2.88)	86.4 (3.40)	6.0 (0.24)	92.8 (3.65)	132.3 (5.21)	12 mm (1/2)	64 Nm
72	Long [UL]	157.2 (6.19)	60.0 (2.36)	60.0 (2.36)	66.0 (2.60)	25.0 (0.98)	73.2 (2.88)	94.9 (3.74)	6.0 (0.24)	92.8 (3.65)	132.3 (5.21)	12 mm (1/2)	64 Nm
73	Long [UL]	159.4 (6.28)	73.5 (2.89)	73.5 (2.89)	79.5 (3.13)	36.0 (1.42)	74.2 (2.92)	108.4 (4.27)	6.0 (0.24)	99.8 (3.93)	131.3 (5.17)	14 mm (9/16)	92 Nm

© 2023 Littelfuse, Inc.

POWR-*SPEED*® Fuses

PSR SERIES HIGH-SPEED SQUARE BODY DIN BLADE

Semiconductor Fuses • DIN 43653 Blade • 40 A—2250 A

Description

Littelfuse PSR series high-speed square body fuses are specially designed for protection of power semiconductor devices such as diodes, triacs, IGBTs, SCRs, MOSFETs, and other solid-state devices that are typically designed into power conversion and power conditioning equipment. Variable frequency drives, inverters, UPS, rectifiers, and soft-starters are examples of typical equipment designed with sensitive power semiconductor devices that cannot withstand any line surge or overcurrent conditions and require high-speed protection.

Littelfuse POWR-*SPEED*® PSR series products offer optimized circuit protection at the extremely fast speed required to protect modern day power conversion devices. Available in DIN43653 blade style termination with visual blown fuse indication standard on all fuses and optional micro-switch for external indication.

Features/Benefits

- Best in class dc performance
- Extremely current limiting
- Superior cycling capability
- Global certification cURus, CCC*, IEC
- Visual and optional microswitch fuse blown indication
- Low watt-loss design
- Compliance with US and Canadian requirements
- Fast-acting Class aR performance

Applications

- Power conversion devices (UPS, inverter, rectifiers, drives)
- Dc systems (dc common bus, dc injection braking)
- Battery protection application (energy storage systems)
- Electric vehicle charging stations
- Heaters and power supplies

* Refer to CCC section of Electrical Characteristics table

Specifications

Voltage Rating	Ac: 450 V–1300 V Dc: 450 V–1000 V
Amperage Rating	40 A–2250 A
Interrupting Rating	Ac: 100 kA–200 kA Dc: 150 kA
Time Constant	10 ms at IR
Microswitch	Yes
Mounting	DIN 43653 blade style
Material	Body: ceramic Contacts: plated copper
Approvals	cURus Recognized (File: E71611) CCC (Ac voltage) *
Applicable Standards	UL248-13, IEC 60269-4 (Class aR)
Environmental	RoHS Compliant, REACH
Operating Temperature	-55 °C to +125 °C
Storage Temperature	Up to +35 °C with relative humidity <65 %
Country of Origin	Mexico

Ordering Part Number

PSR 030 DS 0550 Z

Series

Case Size
30, 31, 32, 33, 70, 71, 72, 73

Termination
DS = DIN 80 mm fixing
DL = DIN 110 mm fixing

Amperage

Packing Quantity
X = (1 pc/box)
Z = (3 pcs/box)

Catalog Number

SERIES	CASE SIZE	TERMINATION	AMPERAGE	CATALOG NUMBER	ORDERING PART NUMBER
PSR	030	DS	0550	PSR030DS0550	PSR030DS0550Z

Recommended Accessories

Microswitch: MS3H1000C (Case Size 30 to 33)
MS7H1500C (Case Size 70 to 73)

Web Resources

Download technical documents: **Littelfuse.com/PSR**

Note: high-speed fuses are designed for fixed installations. They are not intended for use in moving vehicle applications.

© 2023 Littelfuse, Inc.

Electrical Characteristics

CASE SIZE	CATALOG NUMBER		AMPERE RATING (A)	VOLTAGE RATING (V)			INTERRUPTING RATING		MELTING (PRE-ARC) I^2T (A^2S)	TOTAL CLEARING I^2T (A^2S) AT RATED VOLTAGE		WATT LOSS AT 100 % RATED CURRENT (W)	AGENCY CERTIFICATION	
	DIN 80 MM FIXING (DS)	DIN 110 MM FIXING (DL)		AC		DC	AC	DC		AC	DC		cURus	CCC
				IEC	UL									
30	PSR030DS0040	PSR030DL0040	40	690	700	600	200 kA	150 kA	76	280	260	13	•	•
	PSR030DS0050	PSR030DL0050	50	690	700	600	200 kA	150 kA	110	598	384	16	•	•
	PSR030DS0063	PSR030DL0063	63	690	700	600	200 kA	150 kA	176	1023	640	20	•	•
	PSR030DS0080	PSR030DL0080	80	690	700	600	200 kA	150 kA	304	1728	1252	24	•	•
	PSR030DS0100	PSR030DL0100	100	690	700	600	200 kA	150 kA	437	2835	1575	28	•	•
	PSR030DS0125	PSR030DL0125	125	690	700	600	200 kA	150 kA	707	4684	2783	37	•	•
	PSR030DS0160	PSR030DL0160	160	690	700	600	200 kA	150 kA	1359	9114	5507	40	•	•
	PSR030DS0200	PSR030DL0200	200	690	700	600	200 kA	150 kA	3012	15169	14700	40	•	•
	PSR030DS0250	PSR030DL0250	250	690	700	600	200 kA	150 kA	4668	29952	20833	52	•	•
	PSR030DS0315	PSR030DL0315	315	690	700	600	200 kA	150 kA	7131	61830	31600	64	•	•
	PSR030DS0350	PSR030DL0350	350	690	700	600	200 kA	150 kA	12007	85320	49273	66	•	•
	PSR030DS0400	PSR030DL0400	400	690	700	600	200 kA	150 kA	16209	114750	63367	78	•	•
	PSR030DS0450	PSR030DL0450	450	690	700	600	200 kA	150 kA	23133	160110	93533	80	•	•
	PSR030DS0500	PSR030DL0500	500	690	700	600	200 kA	150 kA	31429	225180	137333	84	•	•
	PSR030DS0550	PSR030DL0550	550	690	700	600	200 kA	150 kA	44323	268920	145400	85	•	•
	PSR030DS0630	PSR030DL0630	630	690	700	550	200 kA	150 kA	57404	480010	267800	91	•	
31	PSR031DS0200	PSR031DL0200	200	690	700	600	200 kA	150 kA	1965	17334	16188	49	•	•
	PSR031DS0250	PSR031DL0250	250	690	700	600	200 kA	150 kA	3789	35343	21080	52	•	•
	PSR031DS0315	PSR031DL0315	315	690	700	600	200 kA	150 kA	6862	59130	30694	63	•	•
	PSR031DS0350	PSR031DL0350	350	690	700	600	200 kA	150 kA	9523	76140	40996	67	•	•
	PSR031DS0400	PSR031DL0400	400	690	700	600	200 kA	150 kA	14770	124335	64359	70	•	•
	PSR031DS0450	PSR031DL0450	450	690	700	600	200 kA	150 kA	22457	178200	97444	70	•	•
	PSR031DS0500	PSR031DL0500	500	690	700	600	200 kA	150 kA	29751	251505	125935	74	•	•
	PSR031DS0550	PSR031DL0550	550	690	700	600	200 kA	150 kA	42056	289170	171845	86	•	•
	PSR031DS0630	PSR031DL0630	630	690	700	600	200 kA	150 kA	73513	507465	276315	87	•	•
	PSR031DS0700	PSR031DL0700	700	690	700	600	200 kA	150 kA	98187	601425	337260	93	•	•
	PSR031DS0800	PSR031DL0800	800	690	700	600	200 kA	150 kA	137208	848880	502815	107	•	•
	PSR031DS0900	PSR031DL0900	900	550	600	550	200 kA	150 kA	155163	945100	631820	126	•	
32	PSR032DS0400	PSR032DL0400	400	690	700	600	200 kA	150 kA	11104	79650	44533	87	•	•
	PSR032DS0450	PSR032DL0450	450	690	700	600	200 kA	150 kA	15535	116100	65463	88	•	•
	PSR032DS0500	PSR032DL0500	500	690	700	600	200 kA	150 kA	21573	161460	88277	94	•	•
	PSR032DS0550	PSR032DL0550	550	690	700	600	200 kA	150 kA	26327	177660	107960	106	•	•
	PSR032DS0630	PSR032DL0630	630	690	700	600	200 kA	150 kA	34790	234900	156963	114	•	•
	PSR032DS0700	PSR032DL0700	700	690	700	600	200 kA	150 kA	51191	291870	209287	127	•	•
	PSR032DS0800	PSR032DL0800	800	690	700	600	200 kA	150 kA	60125	472770	249000	152	•	•
	PSR032DS0900	PSR032DL0900	900	690	700	600	200 kA	150 kA	107785	764100	404000	145	•	•
	PSR032DS1000	PSR032DL1000	1000	690	700	600	200 kA	150 kA	190102	933120	672333	149	•	•
	PSR032DS1100	PSR032DL1100	1100	690	700	600	200 kA	150 kA	225379	1247400	744000	161	•	•
	PSR032DS1250	PSR032DL1250	1250	550	500*	450*	200 kA	150 kA	336661	1114994	1197000	166	•	
	PSR032DS1400	PSR032DL1400	1400	450	500	450	200 kA	150 kA	551749	1611639	1865400	184	•	
	PSR032DS1500	PSR032DL1500	1500	450	500	450	200 kA	150 kA	673360	2045907	1735500	192	•	
33	PSR033DS0450	PSR033DL0450	450	690	700	600	200 kA	150 kA	13600	106380	58947	107	•	•
	PSR033DS0500	PSR033DL0500	500	690	700	600	200 kA	150 kA	16434	140400	77846	107	•	•
	PSR033DS0550	PSR033DL0550	550	690	700	600	200 kA	150 kA	23314	187650	100461	111	•	•
	PSR033DS0630	PSR033DL0630	630	690	700	600	200 kA	150 kA	38727	285930	142437	120	•	•
	PSR033DS0700	PSR033DL0700	700	690	700	600	200 kA	150 kA	56763	392580	209863	116	•	•
	PSR033DS0800	PSR033DL0800	800	690	700	600	200 kA	150 kA	84691	575505	348500	122	•	•
	PSR033DS0900	PSR033DL0900	900	690	700	600	200 kA	150 kA	122619	740340	451177	138	•	•
	PSR033DS1000	PSR033DL1000	1000	690	700	600	200 kA	150 kA	222350	1170450	787750	138	•	•
	PSR033DS1100	PSR033DL1100	1100	690	700	600	200 kA	150 kA	310824	1568700	821400	138	•	•
	PSR033DS1250	PSR033DL1250	1250	690	700	500	200 kA	150 kA	476902	2403000	1674333	145	•	•
	PSR033DS1400	PSR033DL1400	1400	690	700	500	200 kA	150 kA	583552	2920050	1979750	173	•	•
	PSR033DS1500	PSR033DL1500	1500	600	650	500	200 kA	150 kA	674538	2433200	1996733	182	•	•
	PSR033DS1600	PSR033DL1600	1600	600	650	500	200 kA	150 kA	779948	2942800	2301633	208	•	•
	PSR033DS1800	PSR033DL1800	1800	600	650	500	200 kA	150 kA	952196	3785040	2724180	260	•	•
	PSR033DS2000	PSR033DL2000	2000	550	600	480	200 kA	150 kA	1234315	4131600	3755180	264	•	•
	PSR033DS2250	PSR033DL2250	2250	500	550	450	200 kA	150 kA	1236000	4459651	3859500	349	•	

* PSR032 1250 A: 600 V Ac/550 V Dc

© 2023 Littelfuse, Inc.

Electrical Characteristics (cont.)

CASE SIZE	CATALOG NUMBER	AMPERE RATING (A)	VOLTAGE RATING (V)			INTERRUPTING RATING		MELTING (PRE-ARC) I^2T (A^2S)	TOTAL CLEARING I^2T (A^2S) AT RATED VOLTAGE		WATT LOSS AT 100 % RATED CURRENT (W)	AGENCY CERTIFICATION	
	DIN 110 MM FIXING (DL)		AC		DC	AC	DC		AC	DC		cURus	CCC
			IEC	UL									
70	PSR070DL0050	50	1250	1300	1000	100 kA	150 kA	177	2050	400	21	•	•
	PSR070DL0063	63	1250	1300	1000	100 kA	150 kA	273	3399	900	24	•	•
	PSR070DL0080	80	1250	1300	1000	100 kA	150 kA	583	6732	2200	25	•	•
	PSR070DL0100	100	1250	1300	1000	100 kA	150 kA	974	10996	3750	30	•	•
	PSR070DL0125	125	1250	1300	1000	100 kA	150 kA	1352	13011	5150	44	•	•
	PSR070DL0160	160	1250	1300	1000	100 kA	150 kA	2377	25662	8950	53	•	•
	PSR070DL0200	200	1250	1300	1000	100 kA	150 kA	4177	39087	17267	62	•	•
	PSR070DL0250	250	1250	1300	1000	100 kA	150 kA	8629	89790	36750	73	•	•
	PSR070DL0280	280	1250	1300	1000	100 kA	150 kA	11844	113201	46750	77	•	•
	PSR070DL0315	315	1250	1300	1000	100 kA	150 kA	18162	142051	66833	80	•	•
	PSR070DL0350	350	1250	1200*	900*	100 kA	150 kA	22963	215230	95410	76	•	
	PSR070DL0400	400	1100	1200	900	100 kA	150 kA	37103	283480	154320	78	•	
71	PSR071DL0160	160	1250	1300	1000	100 kA	150 kA	2756	24600	8800	45	•	•
	PSR071DL0200	200	1250	1300	1000	100 kA	150 kA	4918	50307	19050	52	•	•
	PSR071DL0250	250	1250	1300	1000	100 kA	150 kA	10592	104427	43100	55	•	•
	PSR071DL0280	280	1250	1300	1000	100 kA	150 kA	13763	131897	54150	58	•	•
	PSR071DL0315	315	1250	1300	1000	100 kA	150 kA	20882	200244	67450	59	•	•
	PSR071DL0350	350	1250	1300	1000	100 kA	150 kA	23301	225500	102500	70	•	•
	PSR071DL0400	400	1250	1300	1000	100 kA	150 kA	43211	374986	185000	76	•	•
	PSR071DL0450	450	1250	1300	1000	100 kA	150 kA	55915	452394	241333	88	•	•
	PSR071DL0500	500	1100	1200	900	100 kA	150 kA	75315	468845	253960	93	•	
	PSR071DL0550	550	1100	1200	900	100 kA	150 kA	87328	693507	332600	90	•	
	PSR071DL0630	630	1000	1100	900	100 kA	150 kA	131240	790862	426550	103	•	
72	PSR072DL0250	250	1250	1300	1000	100 kA	150 kA	7737	72789	28567	64	•	•
	PSR072DL0280	280	1250	1300	1000	100 kA	150 kA	10915	124538	46897	62	•	•
	PSR072DL0315	315	1250	1300	1000	100 kA	150 kA	16187	145140	58867	69	•	•
	PSR072DL0350	350	1250	1300	1000	100 kA	150 kA	18727	160447	69633	81	•	•
	PSR072DL0400	400	1250	1300	1000	100 kA	150 kA	27112	243540	108000	93	•	•
	PSR072DL0450	450	1250	1300	1000	100 kA	150 kA	35927	406413	159133	107	•	•
	PSR072DL0500	500	1250	1300	1000	100 kA	150 kA	50398	425375	216333	115	•	•
	PSR072DL0550	550	1250	1300	1000	100 kA	150 kA	73858	539833	271333	115	•	•
	PSR072DL0630	630	1250	1300	1000	100 kA	150 kA	126126	942180	436000	119	•	•
	PSR072DL0700	700	1100	1200	900**	100 kA	150 kA	228761	1123694	715180	89	•	
	PSR072DL0800	800	1100	1200	900**	100 kA	150 kA	230695	1432388	911650	129	•	
	PSR072DL0900	900	1000	900*	900**	100 kA	150 kA	376641	1309993	1030400	131	•	
	PSR072DL1000	1000	850	900	800**	100 kA	150 kA	455955	1772548	1361500	156	•	
73	PSR073DL0315	315	1250	1300	1000	100 kA	150 kA	10245	106600	38650	100	•	•
	PSR073DL0350	350	1250	1300	1000	100 kA	150 kA	13586	159627	57467	100	•	•
	PSR073DL0400	400	1250	1300	1000	100 kA	150 kA	19797	211273	86800	124	•	•
	PSR073DL0450	450	1250	1300	1000	100 kA	150 kA	29834	279073	114333	122	•	•
	PSR073DL0500	500	1250	1300	1000	100 kA	150 kA	42751	416437	184500	121	•	•
	PSR073DL0550	550	1250	1300	1000	100 kA	150 kA	55513	491713	224500	130	•	•
	PSR073DL0630	630	1250	1300	1000	100 kA	150 kA	94649	804338	377500	136	•	•
	PSR073DL0700	700	1250	1300	1000	100 kA	150 kA	158097	1170960	575667	135	•	•
	PSR073DL0800	800	1250	1300	1000**	100 kA	150 kA	234943	1769880	733460	128	•	
	PSR073DL0900	900	950	1050	800**	100 kA	150 kA	317743	2280547	901779	156	•	
	PSR073DL1000	1000	950	1050	800**	100 kA	150 kA	476221	3910801	1546418	143	•	
	PSR073DL1100	1100	950	1050	800**	100 kA	150 kA	570870	2736600	1699000	165	•	
	PSR073DL1250	1250	900	1000	-	100 kA	-	993924	3091160	-	197	•	
	PSR073DL1400	1400	900	1000	-	100 kA	-	1168091	3627820	-	249	•	

* PSR070 350 A: 1300 V Ac/1000 V Dc
PSR072 900 A: 1100 V Ac
** No UL certification for Dc voltage

© 2023 Littelfuse, Inc.

Ordering Information

CASE SIZE	DIN 80 MM FIXING (DS)			DIN 110 MM FIXING (DL)			BOX QUANTITY
	CATALOG NUMBER	ORDERING PART NUMBER	UPC	CATALOG NUMBER	ORDERING PART NUMBER	UPC	
30	PSR030DS0040	PSR030DS0040Z	07945824985	PSR030DL0040	PSR030DL0040Z	07945825049	3 pcs/box
	PSR030DS0050	PSR030DS0050Z	07945824986	PSR030DL0050	PSR030DL0050Z	07945825050	3 pcs/box
	PSR030DS0063	PSR030DS0063Z	07945824987	PSR030DL0063	PSR030DL0063Z	07945825051	3 pcs/box
	PSR030DS0080	PSR030DS0080Z	07945824988	PSR030DL0080	PSR030DL0080Z	07945825052	3 pcs/box
	PSR030DS0100	PSR030DS0100Z	07945824989	PSR030DL0100	PSR030DL0100Z	07945825054	3 pcs/box
	PSR030DS0125	PSR030DS0125Z	07945824990	PSR030DL0125	PSR030DL0125Z	07945825056	3 pcs/box
	PSR030DS0160	PSR030DS0160Z	07945824991	PSR030DL0160	PSR030DL0160Z	07945825057	3 pcs/box
	PSR030DS0200	PSR030DS0200Z	07945824992	PSR030DL0200	PSR030DL0200Z	07945825059	3 pcs/box
	PSR030DS0250	PSR030DS0250Z	07945824993	PSR030DL0250	PSR030DL0250Z	07945825060	3 pcs/box
	PSR030DS0315	PSR030DS0315Z	07945824994	PSR030DL0315	PSR030DL0315Z	07945825062	3 pcs/box
	PSR030DS0350	PSR030DS0350Z	07945824995	PSR030DL0350	PSR030DL0350Z	07945825066	3 pcs/box
	PSR030DS0400	PSR030DS0400Z	07945824996	PSR030DL0400	PSR030DL0400Z	07945825069	3 pcs/box
	PSR030DS0450	PSR030DS0450Z	07945824997	PSR030DL0450	PSR030DL0450Z	07945825070	3 pcs/box
	PSR030DS0500	PSR030DS0500Z	07945824998	PSR030DL0500	PSR030DL0500Z	07945825074	3 pcs/box
	PSR030DS0550	PSR030DS0550Z	07945824999	PSR030DL0550	PSR030DL0550Z	07945825075	3 pcs/box
	PSR030DS0630	PSR030DS0630Z	07945827822	PSR030DL0630	PSR030DL0630Z	07945827801	3 pcs/box
31	PSR031DS0200	PSR031DS0200Z	07945825000	PSR031DL0200	PSR031DL0200Z	07945825076	3 pcs/box
	PSR031DS0250	PSR031DS0250Z	07945825001	PSR031DL0250	PSR031DL0250Z	07945825077	3 pcs/box
	PSR031DS0315	PSR031DS0315Z	07945825002	PSR031DL0315	PSR031DL0315Z	07945825078	3 pcs/box
	PSR031DS0350	PSR031DS0350Z	07945825003	PSR031DL0350	PSR031DL0350Z	07945825079	3 pcs/box
	PSR031DS0400	PSR031DS0400Z	07945825004	PSR031DL0400	PSR031DL0400Z	07945825080	3 pcs/box
	PSR031DS0450	PSR031DS0450Z	07945825005	PSR031DL0450	PSR031DL0450Z	07945825081	3 pcs/box
	PSR031DS0500	PSR031DS0500Z	07945825006	PSR031DL0500	PSR031DL0500Z	07945825082	3 pcs/box
	PSR031DS0550	PSR031DS0550Z	07945825007	PSR031DL0550	PSR031DL0550Z	07945825083	3 pcs/box
	PSR031DS0630	PSR031DS0630Z	07945825008	PSR031DL0630	PSR031DL0630Z	07945825084	3 pcs/box
	PSR031DS0700	PSR031DS0700Z	07945825009	PSR031DL0700	PSR031DL0700Z	07945825085	3 pcs/box
	PSR031DS0800	PSR031DS0800Z	07945825010	PSR031DL0800	PSR031DL0800Z	07945825086	3 pcs/box
	PSR031DS0900	PSR031DS0900Z	07945827823	PSR031DL0900	PSR031DL0900Z	07945827802	3 pcs/box
32	PSR032DS0400	PSR032DS0400X	07945825013	PSR032DL0400	PSR032DL0400X	07945825087	1 pc/box
	PSR032DS0450	PSR032DS0450X	07945825014	PSR032DL0450	PSR032DL0450X	07945825088	1 pc/box
	PSR032DS0500	PSR032DS0500X	07945825015	PSR032DL0500	PSR032DL0500X	07945825089	1 pc/box
	PSR032DS0550	PSR032DS0550X	07945825016	PSR032DL0550	PSR032DL0550X	07945825090	1 pc/box
	PSR032DS0630	PSR032DS0630X	07945825017	PSR032DL0630	PSR032DL0630X	07945825091	1 pc/box
	PSR032DS0700	PSR032DS0700X	07945825021	PSR032DL0700	PSR032DL0700X	07945825092	1 pc/box
	PSR032DS0800	PSR032DS0800X	07945825022	PSR032DL0800	PSR032DL0800X	07945825141	1 pc/box
	PSR032DS0900	PSR032DS0900X	07945825023	PSR032DL0900	PSR032DL0900X	07945825142	1 pc/box
	PSR032DS1000	PSR032DS1000X	07945825025	PSR032DL1000	PSR032DL1000X	07945825143	1 pc/box
	PSR032DS1100	PSR032DS1100X	07945825026	PSR032DL1100	PSR032DL1100X	07945825144	1 pc/box
	PSR032DS1250	PSR032DS1250X	07945827824	PSR032DL1250	PSR032DL1250X	07945827803	1 pc/box
	PSR032DS1400	PSR032DS1400X	07945827825	PSR032DL1400	PSR032DL1400X	07945827804	1 pc/box
	PSR032DS1500	PSR032DS1500X	07945827826	PSR032DL1500	PSR032DL1500X	07945827805	1 pc/box
33	PSR033DS0450	PSR033DS0450X	07945825027	PSR033DL0450	PSR033DL0450X	07945825145	1 pc/box
	PSR033DS0500	PSR033DS0500X	07945825028	PSR033DL0500	PSR033DL0500X	07945825146	1 pc/box
	PSR033DS0550	PSR033DS0550X	07945825030	PSR033DL0550	PSR033DL0550X	07945825147	1 pc/box
	PSR033DS0630	PSR033DS0630X	07945825032	PSR033DL0630	PSR033DL0630X	07945825148	1 pc/box
	PSR033DS0700	PSR033DS0700X	07945825033	PSR033DL0700	PSR033DL0700X	07945825149	1 pc/box
	PSR033DS0800	PSR033DS0800X	07945825034	PSR033DL0800	PSR033DL0800X	07945825150	1 pc/box
	PSR033DS0900	PSR033DS0900X	07945825035	PSR033DL0900	PSR033DL0900X	07945825151	1 pc/box
	PSR033DS1000	PSR033DS1000X	07945825036	PSR033DL1000	PSR033DL1000X	07945825152	1 pc/box
	PSR033DS1100	PSR033DS1100X	07945825038	PSR033DL1100	PSR033DL1100X	07945825153	1 pc/box
	PSR033DS1250	PSR033DS1250X	07945825039	PSR033DL1250	PSR033DL1250X	07945825154	1 pc/box
	PSR033DS1400	PSR033DS1400X	07945825040	PSR033DL1400	PSR033DL1400X	07945825155	1 pc/box
	PSR033DS1500	PSR033DS1500X	07945825042	PSR033DL1500	PSR033DL1500X	07945825156	1 pc/box
	PSR033DS1600	PSR033DS1600X	07945825044	PSR033DL1600	PSR033DL1600X	07945825157	1 pc/box
	PSR033DS1800	PSR033DS1800X	07945825045	PSR033DL1800	PSR033DL1800X	07945825158	1 pc/box
	PSR033DS2000	PSR033DS2000X	07945825046	PSR033DL2000	PSR033DL2000X	07945825159	1 pc/box
	PSR033DS2250	PSR033DS2250X	07945827827	PSR033DL2250	PSR033DL2250X	07945827806	1 pc/box

© 2023 Littelfuse, Inc.

Ordering Information (cont.)

CASE SIZE	DIN 110 MM FIXING (DL)			BOX QUANTITY
	CATALOG NUMBER	ORDERING PART NUMBER	UPC	
70	PSR070DL0050	PSR070DL0050Z	07945825160	3 pcs/box
	PSR070DL0063	PSR070DL0063Z	07945825161	3 pcs/box
	PSR070DL0080	PSR070DL0080Z	07945825162	3 pcs/box
	PSR070DL0100	PSR070DL0100Z	07945825163	3 pcs/box
	PSR070DL0125	PSR070DL0125Z	07945825164	3 pcs/box
	PSR070DL0160	PSR070DL0160Z	07945825165	3 pcs/box
	PSR070DL0200	PSR070DL0200Z	07945825166	3 pcs/box
	PSR070DL0250	PSR070DL0250Z	07945825167	3 pcs/box
	PSR070DL0280	PSR070DL0280Z	07945825168	3 pcs/box
	PSR070DL0315	PSR070DL0315Z	07945825169	3 pcs/box
	PSR070DL0350	PSR070DL0350Z	07945827807	3 pcs/box
	PSR070DL0400	PSR070DL0400Z	07945827808	3 pcs/box
71	PSR071DL0160	PSR071DL0160Z	07945825170	3 pcs/box
	PSR071DL0200	PSR071DL0200Z	07945825171	3 pcs/box
	PSR071DL0250	PSR071DL0250Z	07945825172	3 pcs/box
	PSR071DL0280	PSR071DL0280Z	07945825173	3 pcs/box
	PSR071DL0315	PSR071DL0315Z	07945825174	3 pcs/box
	PSR071DL0350	PSR071DL0350Z	07945825175	3 pcs/box
	PSR071DL0400	PSR071DL0400Z	07945825176	3 pcs/box
	PSR071DL0450	PSR071DL0450Z	07945825177	3 pcs/box
	PSR071DL0500	PSR071DL0500Z	07945827809	3 pcs/box
	PSR071DL0550	PSR071DL0550Z	07945827810	3 pcs/box
	PSR071DL0630	PSR071DL0630Z	07945827811	3 pcs/box
72	PSR072DL0250	PSR072DL0250X	07945825178	1 pc/box
	PSR072DL0280	PSR072DL0280X	07945825179	1 pc/box
	PSR072DL0315	PSR072DL0315X	07945825180	1 pc/box
	PSR072DL0350	PSR072DL0350X	07945825181	1 pc/box
	PSR072DL0400	PSR072DL0400X	07945825182	1 pc/box
	PSR072DL0450	PSR072DL0450X	07945825183	1 pc/box
	PSR072DL0500	PSR072DL0500X	07945825184	1 pc/box
	PSR072DL0550	PSR072DL0550X	07945825185	1 pc/box
	PSR072DL0630	PSR072DL0630X	07945825186	1 pc/box
	PSR072DL0700	PSR072DL0700X	07945827812	1 pc/box
	PSR072DL0800	PSR072DL0800X	07945827813	1 pc/box
	PSR072DL0900	PSR072DL0900X	07945827814	1 pc/box
	PSR072DL1000	PSR072DL1000X	07945827815	1 pc/box
73	PSR073DL0315	PSR073DL0315X	07945825187	1 pc/box
	PSR073DL0350	PSR073DL0350X	07945825188	1 pc/box
	PSR073DL0400	PSR073DL0400X	07945825189	1 pc/box
	PSR073DL0450	PSR073DL0450X	07945825190	1 pc/box
	PSR073DL0500	PSR073DL0500X	07945825191	1 pc/box
	PSR073DL0550	PSR073DL0550X	07945825192	1 pc/box
	PSR073DL0630	PSR073DL0630X	07945825193	1 pc/box
	PSR073DL0700	PSR073DL0700X	07945825194	1 pc/box
	PSR073DL0800	PSR073DL0800X	07945827816	1 pc/box
	PSR073DL0900	PSR073DL0900X	07945827817	1 pc/box
	PSR073DL1000	PSR073DL1000X	07945827818	1 pcsbox
	PSR073DL1100	PSR073DL1100X	07945827819	1 pc/box
	PSR073DL1250	PSR073DL1250X	07945827820	1 pc/box
	PSR073DL1400	PSR073DL1400X	07945827821	1 pc/box

© 2023 Littelfuse, Inc.

Dimensions (DS and DL)

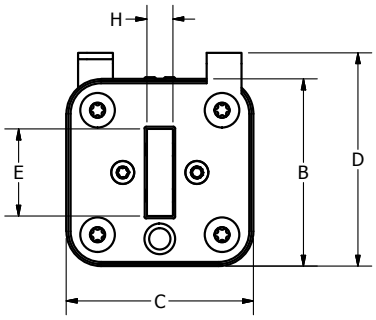

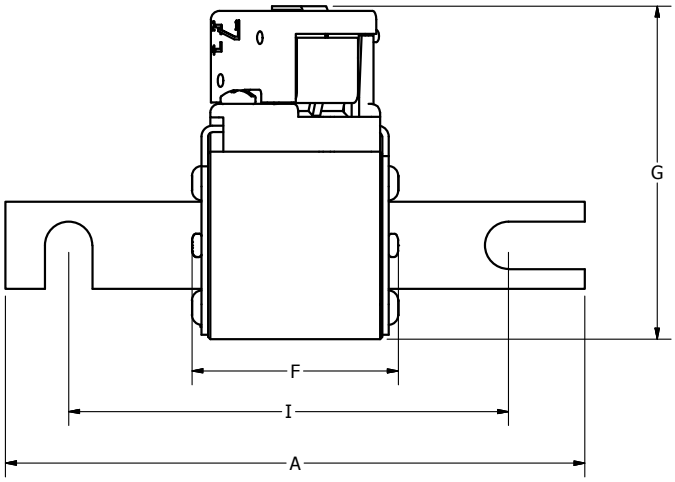

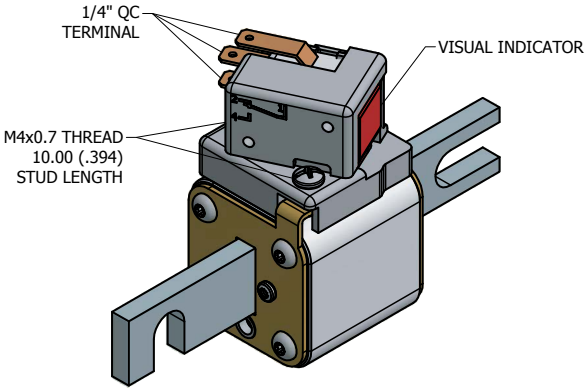

DIMENSIONS MM (IN)												
CASE SIZE	MOUNTING STYLE	A	B	C	D	E	F	G	H	I	RECOMMENDED FASTENER	TIGHTENING TORQUE (REFERENCE ONLY)
30	DIN 80 [DS]	109.0 (4.29)	43.0 (1.69)	43.0 (1.69)	49.0 (1.93)	20.0 (0.79)	47.7 (1.88)	77.9 (3.07)	6.0 (0.24)	77.8 (3.06)	10 mm (3/8)	26 Nm
	DIN 110 [DL]	132.5 (5.22)	43.0 (1.69)	43.0 (1.69)	49.0 (1.93)	20.0 (0.79)	47.7 (1.88)	77.9 (3.07)	6.0 (0.24)	101.8 (4.01)	10 mm (3/8)	26 Nm
31	DIN 80 [DS]	109.2 (4.30)	51.5 (2.03)	51.5 (2.03)	57.5 (2.26)	25.0 (0.98)	49.2 (1.94)	86.4 (3.40)	6.0 (0.24)	77.8 (3.06)	10 mm (3/8)	26 Nm
	DIN 110 [DL]	133.2 (5.24)	51.5 (2.03)	51.5 (2.03)	57.5 (2.26)	25.0 (0.98)	49.2 (1.94)	86.4 (3.40)	6.0 (0.24)	101.8 (4.01)	10 mm (3/8)	26 Nm
32	DIN 80 [DS]	109.2 (4.30)	60.0 (2.36)	60.0 (2.36)	66.0 (2.60)	25.0 (0.98)	49.2 (1.94)	94.9 (3.74)	6.0 (0.24)	77.8 (3.06)	10 mm (3/8)	26 Nm
	DIN 110 [DL]	133.2 (5.24)	60.0 (2.36)	60.0 (2.36)	66.0 (2.60)	25.0 (0.98)	49.2 (1.94)	94.9 (3.74)	6.0 (0.24)	101.8 (4.01)	10 mm (3/8)	26 Nm
33	DIN 80 [DS]	109.2 (4.30)	73.5 (2.89)	73.5 (2.89)	79.5 (3.13)	36.0 (1.42)	50.2 (1.98)	108.4 (4.27)	6.0 (0.24)	77.8 (3.06)	10 mm (3/8)	26 Nm
	DIN 110 [DL]	133.2 (5.24)	73.5 (2.89)	73.5 (2.89)	79.5 (3.13)	36.0 (1.42)	50.2 (1.98)	108.4 (4.27)	6.0 (0.24)	101.8 (4.01)	10 mm (3/8)	26 Nm
70	DIN 110 [DL]	133.0 (5.24)	43.0 (1.69)	43.0 (1.69)	49.0 (1.93)	20.0 (0.79)	71.7 (2.82)	77.9 (3.07)	6.0 (0.24)	101.8 (4.01)	10 mm (3/8)	26 Nm
71	DIN 110 [DL]	133.2 (5.24)	51.5 (2.03)	51.5 (2.03)	57.5 (2.26)	25.0 (0.98)	73.2 (2.88)	86.4 (3.40)	6.0 (0.24)	101.8 (4.01)	10 mm (3/8)	26 Nm
72	DIN 110 [DL]	133.2 (5.24)	60.0 (2.36)	60.0 (2.36)	66.0 (2.60)	25.0 (0.98)	73.2 (2.88)	94.9 (3.74)	6.0 (0.24)	101.8 (4.01)	10 mm (3/8)	26 Nm
73	DIN 110 [DL]	133.2 (5.24)	73.5 (2.89)	73.5 (2.89)	79.5 (3.13)	36.0 (1.42)	74.2 (2.92)	108.4 (4.27)	6.0 (0.24)	101.8 (4.01)	10 mm (3/8)	26 Nm

© 2023 Littelfuse, Inc.

POWR-*SPEED*® Fuses

L75QS SERIES HIGH-SPEED ROUND BODY

750 V dc • Very Fast Acting • 35–800 A

Description

The L75QS series is a next generation high-speed fuse for the protection of power semiconductor devices and is designed in the traditional round body bolted style package.

L75QS series high-speed fuses rated at 750 V dc are extremely current limiting and are used to protect power converters, drives and control circuit applications. Designed with lower I^2t performance characteristics, these fuses provide balanced performance to extend longevity while lowering potentially damaging heat energy to the devices being protected.

In addition L75QS series fuses have been designed with a universal mounting option to meet customer requirements for installation into a variety of application configurations.

Littelfuse POWR-*SPEED* products offer optimized circuit protection at the extremely fast speed required to protect modern day, sensitive, high-power semiconductor devices.

Features

- Compliance with US and Canadian requirements
- Traditional North American bolted style dimensions
- 750 V dc performance
- Direct bus-bar mount or stud mount design
- Halogen free, RoHS and REACH Compliant

Applications

- Power converters (inverters, rectifiers)
- Power supplies, UPS
- EV charging stations
- Variable speed drives
- Dc common bus

Specifications

Voltage Rating	Dc: 750 V
Amperage Rating	35–800 A
Interrupting Rating	Dc: 50 kA
Time Constant	10 ms
Material	Body: melamine Caps: copper alloy
Approvals	UL Recognized (E71611) cURus (E71611)
Environmental	RoHS Compliant, REACH
Country of Origin	Mexico
Operating Temperature	-55 °C to +125 °C
Storage Temperature	Up to 35 °C with relative humidity <65 %

Part Numbering System

L75 QS 700 . X

Series — L75

Body Type — QS

Ampere Code — 700

Package Quantity — X
X = 1 (225–800 A)
V = 5 (35–200 A)

SERIES	BODY TYPE	AMPERE CODE	PACKAGE QUANTITY	CATALOG NUMBER	ORDERING NUMBER
L75	QS	700	1	L75QS700	L75QS700.X

Recommended Fuse Blocks

LSCR101 (35–100 A)
LSCR102 (125–800 A)
LSCR103 (450–800 A)

Web Resources

Download technical documents: **Littelfuse.com/L75QS**

Note: high-speed fuses are designed for fixed installations. They are not intended for use in moving vehicle applications.

© 2023 Littelfuse, Inc.

Electrical Specifications

CATALOG NUMBER	AMPERAGE RATING	VOLTAGE RATING	INTERRUPT RATING	MELTING (PRE-ARC) I^2T (A^2s)	TOTAL CLEARING I^2T (A^2s)	WATTS LOSS AT 80 % RATED CURRENT	WATTS LOSS AT 100 % RATED CURRENT
		DC	DC		50 KA @ 750 V DC	(W)	(W)
L75QS035	35	750	50 kA	129	406	5	8
L75QS040	40	750	50 kA	153	549	6	9
L75QS050	50	750	50 kA	196	776	6	12
L75QS060	60	750	50 kA	269	895	9	15
L75QS070	70	750	50 kA	359	1,399	10	20
L75QS080	80	750	50 kA	452	1,841	12	22
L75QS090	90	750	50 kA	625	2,498	13	25
L75QS100	100	750	50 kA	966	3,053	15	30
L75QS125	125	750	50 kA	2,208	7,069	13	24
L75QS150	150	750	50 kA	3,026	10,401	17	32
L75QS175	175	750	50 kA	4,216	14,786	20	38
L75QS200	200	750	50 kA	5,529	20,433	22	42
L75QS225	225	750	50 kA	9,226	27,520	22	40
L75QS250	250	750	50 kA	10,999	34,291	27	46
L75QS300	300	750	50 kA	16,296	49,297	31	57
L75QS350	350	750	50 kA	24,778	70,696	35	67
L75QS400	400	750	50 kA	34,225	102,567	41	79
L75QS450	450	750	50 kA	38,946	119,606	45	81
L75QS500	500	750	50 kA	42,747	132,252	56	112
L75QS600	600	750	50 kA	67,363	189,333	67	138
L75QS700	700	750	50 kA	99,387	302,425	72	138
L75QS800	800	750	50 kA	156,137	421,500	76	142

Ordering Information

SERIES	AMPERAGE RATING	AMPERE CODE	CATALOG NUMBER	ORDERING NUMBER	PACK QUANTITY	UPC
L75QS	35	035	L75QS035	L75QS035.V	5 Pcs/ Box	07945823571
L75QS	40	040	L75QS040	L75QS040.V	5 Pcs/ Box	07945823572
L75QS	50	050	L75QS050	L75QS050.V	5 Pcs/ Box	07945823573
L75QS	60	060	L75QS060	L75QS060.V	5 Pcs/ Box	07945823574
L75QS	70	070	L75QS070	L75QS070.V	5 Pcs/ Box	07945823575
L75QS	80	080	L75QS080	L75QS080.V	5 Pcs/ Box	07945823576
L75QS	90	090	L75QS090	L75QS090.V	5 Pcs/ Box	07945823577
L75QS	100	100	L75QS100	L75QS100.V	5 Pcs/ Box	07945823578
L75QS	125	125	L75QS125	L75QS125.V	5 Pcs/ Box	07945823579
L75QS	150	150	L75QS150	L75QS150.V	5 Pcs/ Box	07945823580
L75QS	175	175	L75QS175	L75QS175.V	5 Pcs/ Box	07945823581
L75QS	200	200	L75QS200	L75QS200.V	5 Pcs/ Box	07945823582
L75QS	225	225	L75QS225	L75QS225.X	1 Pc/ Box	07945823583
L75QS	250	250	L75QS250	L75QS250.X	1 Pc/ Box	07945823584
L75QS	300	300	L75QS300	L75QS300.X	1 Pc/ Box	07945823585
L75QS	350	350	L75QS350	L75QS350.X	1 Pc/ Box	07945823586
L75QS	400	400	L75QS400	L75QS400.X	1 Pc/ Box	07945823587
L75QS	450	450	L75QS450	L75QS450.X	1 Pc/ Box	07945823588
L75QS	500	500	L75QS500	L75QS500.X	1 Pc/ Box	07945823589
L75QS	600	600	L75QS600	L75QS600.X	1 Pc/ Box	07945823590
L75QS	700	700	L75QS700	L75QS700.X	1 Pc/ Box	07945823591
L75QS	800	800	L75QS800	L75QS800.X	1 Pc/ Box	07945823592

© 2023 Littelfuse, Inc.

Dimensions
Millimeters [inches]

Document Number: OL-L75QS000

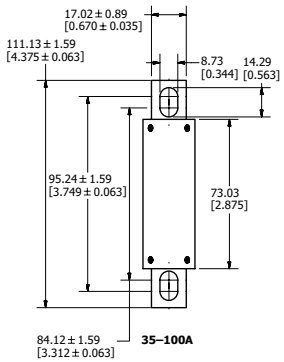

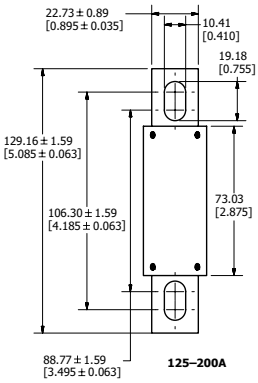

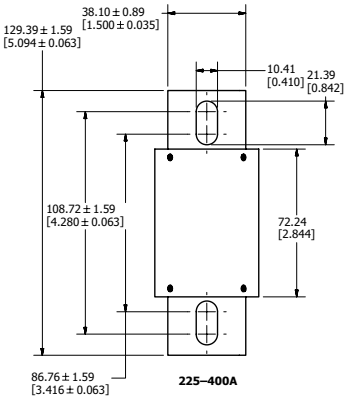

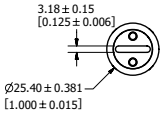

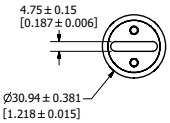

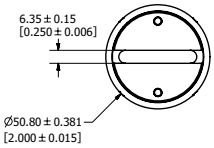

Stud Size: M8 (5/16″)
Recommended Torque: 15 Nm (132.76 in-lb)

Stud Size: M8 (5/16″)
Recommended Torque: 15 Nm (132.76 in-lb)

Stud Size: M8 (5/16″)
Recommended Torque: 15 Nm (132.76 in-lb)

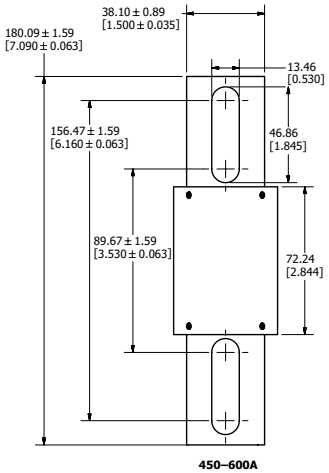

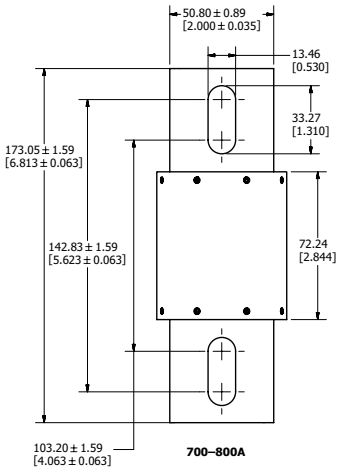

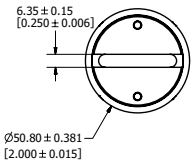

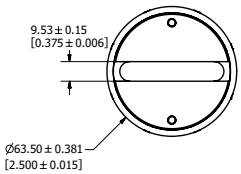

Stud Size: M12 (½″)
Recommended Torque: 54 Nm (477.94 in-lb)

Stud Size: M12 (1/2″)
Recommended Torque: 54 Nm (477.94 in-lb)

© 2023 Littelfuse, Inc.

POWR-*SPEED*® Fuses

L70QS SERIES HIGH-SPEED ROUND BODY

700 V ac/dc • Very Fast Acting • 35–800 A

Description

The L70QS series is a next generation high-speed fuse for the protection of power semiconductor devices and is designed in the traditional North American bolted style package.

L70QS series high-speed fuses are extremely current limiting and are used to protect power converters, drives and control circuit applications. Designed with lower I^2t performance characteristics, these fuses provide balanced performance to extend longevity while lowering potentially damaging heat energy to the devices being protected.

In addition L70QS series fuses have been designed with a universal mounting option to meet customer requirements for installation into a variety of application configurations

Littelfuse POWR-*SPEED* products offer optimized circuit protection at the extremely fast speed required to protect modern day, sensitive, high-power semiconductor devices. Such products are commonly found in various industries including pulp and paper industries, cranes and heavy-lifting equipment, processing industries, wastewater treatment plants and large factories and MRO facilities.

Features

- Compliance with US and Canadian requirements
- Traditional North American bolted style dimensions
- Class aR performance
- Direct bus-bar mount or stud mount design
- Halogen free, RoHS and REACH Compliant

Applications

- Power converters (inverters, rectifiers)
- Power supplies
- UPS
- Variable speed drives
- Control circuits
- Soft starters

Specifications

Voltage Rating	Ac: 700 V Dc: 700 V
Amperage Rating	35–800 A
Interrupting Rating	Ac: 200 kA Dc: 50 kA
Time Constant	10 ms
Material	Body: melamine Caps: copper alloy (silver plated)
Approvals	UL Recognized (E71611) cURus (E71611)
Environmental	RoHS Compliant, REACH
Country of Origin	Mexico
Operating Temperature	-55 °C to +125 °C
Storage Temperature	Up to 35 °C with relative humidity <65 %

Part Numbering System

L70 QS 700 .X

Series — L70

Body Type — QS

Ampere Code — 700
Refer to Ordering Information table

Package Quantity — .X
X = 1 (225–800 A)
V = 5 (35–200 A)

SERIES	BODY TYPE	AMPERE CODE	PACKAGE QUANTITY	CATALOG NUMBER	ORDERING NUMBER
L70	QS	700	1	L70QS700	L70QS700.X

Recommended Fuse Blocks

LSCR001 (35–100 A)
LSCR002 (125–800 A)

Web Resources

Download technical documents: **Littelfuse.com/L70QS**

Note: high-speed fuses are designed for fixed installations. They are not intended for use in moving vehicle applications.

© 2023 Littelfuse, Inc.

Electrical Specifications

CATALOG NUMBER	AMPERAGE RATING	VOLTAGE RATING		INTERRUPT RATING		MELTING (PRE-ARC) I^2T (A^2s)	TOTAL CLEARING I^2T (A^2s)	TOTAL CLEARING I^2T (A^2s)	WATTS LOSS AT 80 % RATED CURRENT	WATTS LOSS AT 100 % RATED CURRENT
		AC	DC	AC	DC		200 kA @ 700 V AC	50 kA @ 700 V DC	(W)	(W)
L70QS035	35	700	700	200 kA	50 kA	129	332	308	5	8
L70QS040	40	700	700	200 kA	50 kA	153	599	416	6	9
L70QS050	50	700	700	200 kA	50 kA	196	711	588	6	12
L70QS060	60	700	700	200 kA	50 kA	269	1,233	678	9	15
L70QS070	70	700	700	200 kA	50 kA	359	1,575	1,075	10	20
L70QS080	80	700	700	200 kA	50 kA	452	2,755	1,415	12	22
L70QS090	90	700	700	200 kA	50 kA	625	3,365	1,920	13	25
L70QS100	100	700	700	200 kA	50 kA	966	3,747	2,347	15	30
L70QS125	125	700	700	200 kA	50 kA	2,208	8,795	5,570	13	24
L70QS150	150	700	700	200 kA	50 kA	3,026	13,650	8,195	17	32
L70QS175	175	700	700	200 kA	50 kA	4,219	19,550	11,650	20	38
L70QS200	200	700	700	200 kA	50 kA	5,529	22,067	16,100	22	42
L70QS225	225	700	700	200 kA	50 kA	9,226	34,900	25,400	22	40
L70QS250	250	700	700	200 kA	50 kA	10,999	43,750	31,650	27	46
L70QS300	300	700	700	200 kA	50 kA	16,296	64,400	45,500	31	57
L70QS350	350	700	700	200 kA	50 kA	24,778	91,500	65,250	35	67
L70QS400	400	700	700	200 kA	50 kA	34,225	110,667	94,666	41	79
L70QS450	450	700	700	200 kA	50 kA	38,946	145,500	113,500	45	81
L70QS500	500	700	700	200 kA	50 kA	42,747	173,000	125,500	56	112
L70QS600	600	700	700	200 kA	50 kA	67,363	220,333	179,667	67	138
L70QS700	700	700	700	200 kA	50 kA	99,387	368,000	298,000	72	138
L70QS800	800	700	700	200 kA	50 kA	156,137	466,333	415,333	76	142

Ordering Information

SERIES	AMPERAGE RATING	AMPERE CODE	CATALOG NUMBER	ORDERING NUMBER	PACK QUANTITY	UPC
L70QS	35	035	L70QS035	L70QS035.V	5 Pcs/ Box	07945886015
L70QS	40	040	L70QS040	L70QS040.V	5 Pcs/ Box	07945886016
L70QS	50	050	L70QS050	L70QS050.V	5 Pcs/ Box	07945886017
L70QS	60	060	L70QS060	L70QS060.V	5 Pcs/ Box	07945886018
L70QS	70	070	L70QS070	L70QS070.V	5 Pcs/ Box	07945886019
L70QS	80	080	L70QS080	L70QS080.V	5 Pcs/ Box	07945886020
L70QS	90	090	L70QS090	L70QS090.V	5 Pcs/ Box	07945886021
L70QS	100	100	L70QS100	L70QS100.V	5 Pcs/ Box	07945886022
L70QS	125	125	L70QS125	L70QS125.V	5 Pcs/ Box	07945886023
L70QS	150	150	L70QS150	L70QS150.V	5 Pcs/ Box	07945886024
L70QS	175	175	L70QS175	L70QS175.V	5 Pcs/ Box	07945886025
L70QS	200	200	L70QS200	L70QS200.V	5 Pcs/ Box	07945886026
L70QS	225	225	L70QS225	L70QS225.X	1 Pc/ Box	07945886027
L70QS	250	250	L70QS250	L70QS250.X	1 Pc/ Box	07945886028
L70QS	300	300	L70QS300	L70QS300.X	1 Pc/ Box	07945886029
L70QS	350	350	L70QS350	L70QS350.X	1 Pc/ Box	07945886030
L70QS	400	400	L70QS400	L70QS400.X	1 Pc/ Box	07945886031
L70QS	450	450	L70QS450	L70QS450.X	1 Pc/ Box	07945886032
L70QS	500	500	L70QS500	L70QS500.X	1 Pc/ Box	07945886033
L70QS	600	600	L70QS600	L70QS600.X	1 Pc/ Box	07945886034
L70QS	700	700	L70QS700	L70QS700.X	1 Pc/ Box	07945886035
L70QS	800	800	L70QS800	L70QS800.X	1 Pc/ Box	07945886036

© 2023 Littelfuse, Inc.

Dimensions
Millimeters [inches]

Document Number: OL-L70QS000

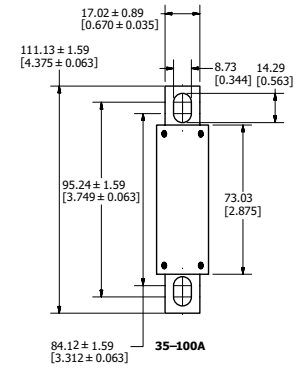

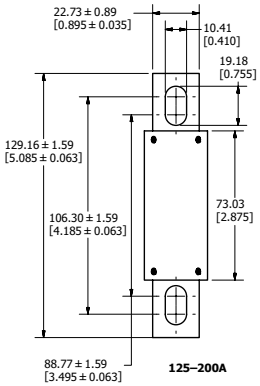

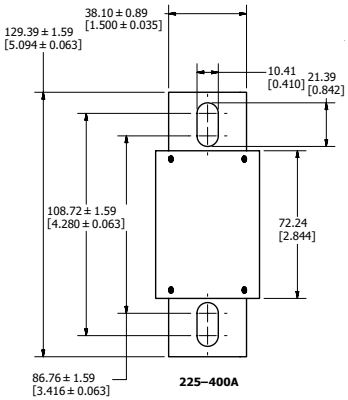

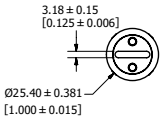

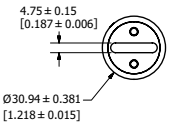

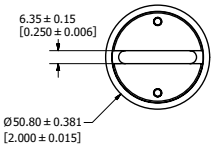

Stud Size: M8 (5/16")
Recommended Torque: 15 Nm (132.76 in-lb)

Stud Size: M8 (5/16")
Recommended Torque: 15 Nm (132.76 in-lb)

Stud Size: M8 (5/16")
Recommended Torque: 15 Nm (132.76 in-lb)

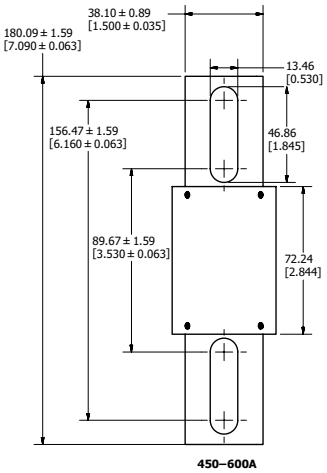

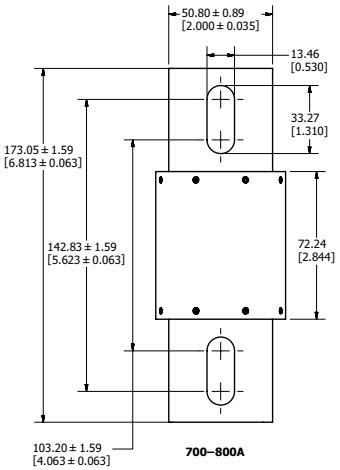

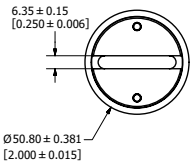

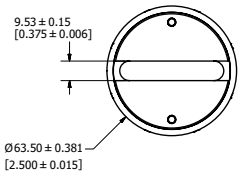

Stud Size: M12 (1/2")
Recommended Torque: 54 Nm (477.94 in-lb)

Stud Size: M12 (1/2")
Recommended Torque: 54 Nm (477.94 in-lb)

© 2023 Littelfuse, Inc.

POWR-*SPEED*® Fuses

L50QS SERIES HIGH-SPEED ROUND BODY

500 V ac/dc • Very Fast Acting • 35–800 A

Description

The L50QS series is a next generation high-speed fuse for the protection of power semiconductor devices and is designed in the traditional North American bolted style package.

L50QS series high-speed fuses are extremely current limiting and are used to protect power converters, drives and control circuit applications. Designed with lower I^2t performance characteristics, these fuses provide balanced performance to extend longevity while lowering potentially damaging heat energy to the devices being protected.

In addition L50QS series fuses have been designed with a universal mounting option to meet customer requirements for installation into a variety of application configurations

Littelfuse POWR-*SPEED* products offer optimized circuit protection at the extremely fast speed required to protect modern day, sensitive, high-power semiconductor devices. Such products are commonly found in various industries including pulp and paper industries, cranes and heavy-lifting equipment, processing industries, wastewater treatment plants and large factories and MRO facilities.

Features

- Compliance with US and Canadian requirements
- Traditional North American bolted style dimensions
- Class aR performance
- Direct bus-bar mount or stud mount design
- Halogen free, RoHS and REACH Compliant

Applications

- Power converters (inverters, rectifiers)
- Power supplies
- UPS
- Variable speed drives
- Control circuits
- Soft starters

Specifications

Voltage Rating	Ac: 500 V Dc: 500 V
Amperage Rating	35–800 A
Interrupting Rating	Ac: 200 kA Dc: 50 kA
Time Constant	10 ms
Material	Body: melamine Caps: copper alloy (silver plated)
Approvals	UL Recognized (E71611) cURus (E71611)
Environmental	RoHS Compliant, REACH
Country of Origin	Mexico
Operating Temperature	-55 °C to +125 °C
Storage Temperature	Up to 35 °C with relative humidity <65 %

Part Numbering System

L50 QS 500 X

- **Series** — L50
- **Body Type** — QS
- **Ampere Code** — 500
- **Package Quantity** — X
  - X = 1 (450–800 A)
  - V = 5 (125–400 A)
  - T = 10 (35–100 A)

SERIES	BODY TYPE	AMPERE CODE	PACKAGE QUANTITY	CATALOG NUMBER	ORDERING NUMBER
L50	QS	500	1	L50QS500	L50QS500.X

Recommended Fuse Blocks

LSCR001 (35–200A)
LSCR002 (225–800A)

Web Resources

Download technical documents: **Littelfuse.com/L50QS**

Note: high-speed fuses are designed for fixed installations. They are not intended for use in moving vehicle applications.

© 2023 Littelfuse, Inc.

Electrical Specifications

CATALOG NUMBER	AMPERAGE RATING	VOLTAGE RATING		INTERRUPT RATING		MELTING (PRE-ARC) I^2T (A^2s)	TOTAL CLEARING I^2T (A^2s)	TOTAL CLEARING I^2T (A^2s)	WATTS LOSS AT 80 % RATED CURRENT	WATTS LOSS AT 100 % RATED CURRENT
		AC	DC	AC	DC		200 KA @ 500 V AC	50 KA @ 500 V DC	(W)	(W)
L50QS035	35	500	500	200 kA	50 kA	111	430	290	3	5
L50QS040	40	500	500	200 kA	50 kA	137	530	363	3	9
L50QS050	50	500	500	200 kA	50 kA	211	770	516	5	8
L50QS060	60	500	500	200 kA	50 kA	269	1,500	881	5	9
L50QS070	70	500	500	200 kA	50 kA	393	1,775	1,185	6	11
L50QS080	80	500	500	200 kA	50 kA	616	3,550	1,720	6	11
L50QS090	90	500	500	200 kA	50 kA	720	4,075	1,990	8	14
L50QS100	100	500	500	200 kA	50 kA	905	4,577	2,313	9	17
L50QS125	125	500	500	200 kA	50 kA	1,503	7,655	4,815	10	17
L50QS150	150	500	500	200 kA	50 kA	2,382	11,100	7,190	12	21
L50QS175	175	500	500	200 kA	50 kA	3,148	16,500	9,900	14	25
L50QS200	200	500	500	200 kA	50 kA	4,102	18,233	11,567	17	32
L50QS225	225	500	500	200 kA	50 kA	5,379	25,300	16,700	19	35
L50QS250	250	500	500	200 kA	50 kA	7,094	31,350	22,500	20	37
L50QS275	275	500	500	200 kA	50 kA	9,655	40,175	30,177	21	39
L50QS300	300	500	500	200 kA	50 kA	11,240	53,800	36,150	25	46
L50QS325	325	500	500	200 kA	50 kA	13,183	56,250	41,000	27	51
L50QS350	350	500	500	200 kA	50 kA	14,246	68,850	44,800	30	61
L50QS400	400	500	500	200 kA	50 kA	21,155	100,300	67,300	33	65
L50QS450	450	500	500	200 kA	50 kA	26,425	121,000	84,650	35	63
L50QS500	500	500	500	200 kA	50 kA	31,747	141,000	103,500	39	72
L50QS600	600	500	500	200 kA	50 kA	43,922	193,500	128,000	49	92
L50QS700	700	500	500	200 kA	50 kA	75,597	314,000	230,000	51	92
L50QS800	800	500	500	200 kA	50 kA	92,717	393,500	280,000	63	117

© 2023 Littelfuse, Inc.

Dimensions
Millimeters [inches]

Document Number: OL-L50QS000

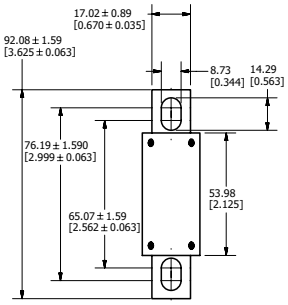

35–100A

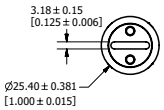

Stud Size: M8 (5/16″)
Recommended Torque: 15 Nm (132.76 in-lb)

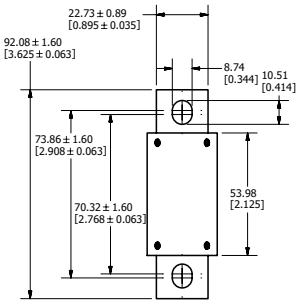

125–200A

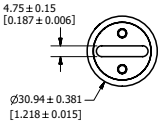

Stud Size: M8 (5/16″)
Recommended Torque: 15 Nm (132.76 in-lb)

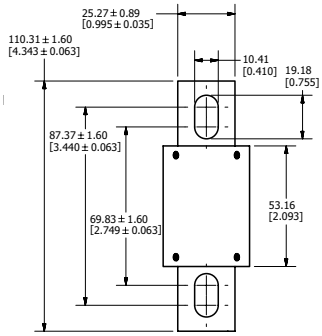

225–400A

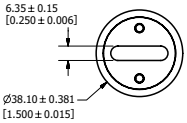

Stud Size: M8 (5/16″)
Recommended Torque: 15 Nm (132.76 in-lb)

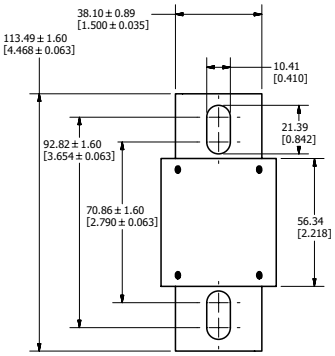

450–600A

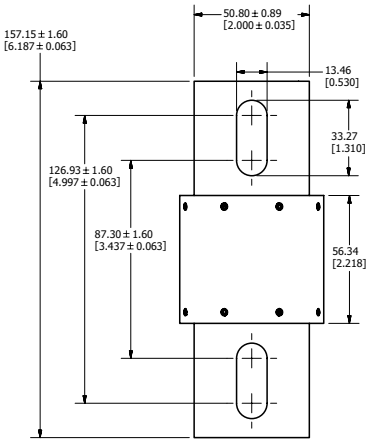

700–800A

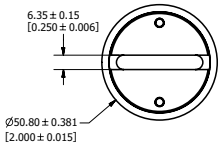

Stud Size: M8 (5/16″)
Recommended Torque: 15 Nm (132.76 in-lb)

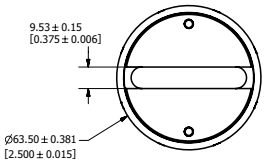

Stud Size: M12 (1/2″)
Recommended Torque: 54 Nm (477.94 in-lb)

© 2023 Littelfuse, Inc.

Ordering Information

SERIES	AMPERAGE RATING	AMPERE CODE	CATALOG NUMBER	ORDERING NUMBER	PACK QUANTITY	UPC
L50QS	35	035	L50QS035	L50QS035.T	10 Pcs/ Box	07945885991
L50QS	40	040	L50QS040	L50QS040.T	10 Pcs/ Box	07945885992
L50QS	50	050	L50QS050	L50QS050.T	10 Pcs/ Box	07945885993
L50QS	60	060	L50QS060	L50QS060.T	10 Pcs/ Box	07945885994
L50QS	70	070	L50QS070	L50QS070.T	10 Pcs/ Box	07945885995
L50QS	80	080	L50QS080	L50QS080.T	10 Pcs/ Box	07945885996
L50QS	90	090	L50QS090	L50QS090.T	10 Pcs/ Box	07945885997
L50QS	100	100	L50QS100	L50QS100.T	10 Pcs/ Box	07945885998
L50QS	125	125	L50QS125	L50QS125.V	5 Pcs/ Box	07945885999
L50QS	150	150	L50QS150	L50QS150.V	5 Pcs/ Box	07945886000
L50QS	175	175	L50QS175	L50QS175.V	5 Pcs/ Box	07945886001
L50QS	200	200	L50QS200	L50QS200.V	5 Pcs/ Box	07945886002
L50QS	225	225	L50QS225	L50QS225.V	5 Pcs/ Box	07945886003
L50QS	250	250	L50QS250	L50QS250.V	5 Pcs/ Box	07945886004
L50QS	275	275	L50QS275	L50QS275.V	5 Pcs/ Box	07945886005
L50QS	300	300	L50QS300	L50QS300.V	5 Pcs/ Box	07945886006
L50QS	325	325	L50QS325	L50QS325.V	5 Pcs/ Box	07945886011
L50QS	350	350	L50QS350	L50QS350.V	5 Pcs/ Box	07945886007
L50QS	400	400	L50QS400	L50QS400.V	5 Pcs/ Box	07945886008
L50QS	450	450	L50QS450	L50QS450.X	1 Pc/ Box	07945886009
L50QS	500	500	L50QS500	L50QS500.X	1 Pc/ Box	07945886010
L50QS	600	600	L50QS600	L50QS600.X	1 Pc/ Box	07945886012
L50QS	700	700	L50QS700	L50QS700.X	1 Pc/ Box	07945886013
L50QS	800	800	L50QS800	L50QS800.X	1 Pc/ Box	07945886014

© 2023 Littelfuse, Inc.

POWR-*SPEED*® Fuses

L70S SERIES HIGH-SPEED ROUND BODY

700 V ac • Very Fast Acting • 650 V dc • 10–800 A

Description

Littelfuse L70S series high-speed fuses are designed to protect today's equipment and systems, and are manufactured with Littelfuse-developed technology that sets tomorrow's standards for accuracy, consistent quality, reliability, and predictable performance.

Littelfuse engineers have redefined high-speed fuse technology by using advanced metallurgical, polymer, and materials research, mathematical modeling, and computerized statistical analysis.

Features/Benefits

- Extremely current limiting
- Low watt losses
- Controlled transient over-voltages
- UL Recognized

Applications

- Ac and dc drives
- Dc common bus protection
- Power converters
- UPS
- Soft-starters

Specifications

Voltage Rating	700 V ac 650 V dc
Amperage Rating	10, 15, 20, 25, 30, 35, 40, 50, 60, 70, 80, 90, 100, 125, 150, 175, 200, 225, 250, 300, 350, 400, 450, 500, 600, 700, 800
Interrupting Rating	Ac: 200 kAIC Dc: 20 kAIC
Material	Body: melamine Terminals: copper (silver plated)
Mounting Type	Cylindrical (10–0 A) Bolted tags (35–800 A)
Operating Temperature	-55 °C to +125 °C
Storage Temperature	Up to 35 °C with relative humidity < 65 %
Approvals	UL Recognized (File: E71611) CSA Recognized (File: LR29862)
Environmental	RoHS Compliant
Country of Origin	Mexico

Part Numbering System

L70S xxx .T

Series — L70S

Ampere Code — xxx
(3 digit minimum amperage in decimal form)

Package Quantity — .T
Refer to Pack Qty. Column in Ordering Information Table

SERIES	AMP	CATALOG NUMBER	ORDERING NUMBER
L70S	10	L70S010	L70S010.T
L70S	500	L70S500	L70S500.X

Recommended Fuse Block

LSCR001 (35–100 A)
LSCR002 (125–800 A)
107/127 Series (10-30A)

Web Resources

Download technical documents: **Littelfuse.com/L70S**

Note: high-speed fuses are designed for fixed installations. They are not intended for use in moving vehicle applications.

© 2023 Littelfuse, Inc.

Electrical Specifications

CATALOG NUMBER	AMPERAGE RATING	VOLTAGE RATING		INTERRUPT RATING		MELTING (PRE-ARC) I^2T (A^2s)	TOTAL CLEARING I^2T (A^2s)	TOTAL CLEARING I^2T (A^2s)	TOTAL CLEARING I^2T (A^2s)	WATTS LOSS AT 100 % RATED CURRENT	WATTS LOSS AT 80 % RATED CURRENT
		AC	DC	AC	DC		100 kA @ 700 V AC	200 kA @ 700 V AC	20 kA @ 650 V DC	(W)	(W)
L70S010	10	700	650	200 kA	20 kA	21	160	173	346	2	1
L70S015	15	700	650	200 kA	20 kA	34	330	355	270	2	2
L70S020	20	700	650	200 kA	20 kA	48	550	599	300	5	2
L70S025	25	700	650	200 kA	20 kA	62	810	900	340	7	4
L70S030	30	700	650	200 kA	20 kA	77	1,130	1,220	417	10	5
L70S035	35	700	650	200 kA	20 kA	110	1,470	1,500	500	12	6
L70S040	40	700	650	200 kA	20 kA	150	1,830	2,000	660	13	7
L70S050	50	700	650	200 kA	20 kA	250	2,670	3,200	1,070	16	9
L70S060	60	700	650	200 kA	20 kA	380	3,646	4,674	1,572	18	9
L70S070	70	700	650	200 kA	20 kA	545	4,800	6,000	1,970	16	9
L70S080	80	700	650	200 kA	20 kA	745	6,180	7,550	2,380	21	11
L70S090	90	700	650	200 kA	20 kA	990	7,650	9,250	2,830	25	13
L70S100	100	700	650	200 kA	20 kA	1,266	9,407	11,117	3,266	29	14
L70S125	125	700	650	200 kA	20 kA	2,150	14,700	17,550	4,900	33	17
L70S150	150	700	650	200 kA	20 kA	3,280	21,250	25,700	6,800	51	24
L70S175	175	700	650	200 kA	20 kA	4,700	28,750	34,800	9,000	63	28
L70S200	200	700	650	200 kA	20 kA	6,411	37,300	45,583	11,447	75	33
L70S225	225	700	650	200 kA	20 kA	8,000	46,500	57,000	16,000	43	24
L70S250	250	700	650	200 kA	20 kA	9,900	58,000	69,500	22,000	49	27
L70S300	300	700	650	200 kA	20 kA	14,000	83,000	97,700	37,500	60	33
L70S350	350	700	650	200 kA	20 kA	19,000	113,000	131,000	59,000	71	36
L70S400	400	700	650	200 kA	20 kA	24,373	147,290	169,000	87,875	107	49
L70S450	450	700	650	200 kA	20 kA	33,000	191,000	219,000	119,000	85	47
L70S500	500	700	650	200 kA	20 kA	44,200	240,000	275,000	155,000	92	49
L70S600	600	700	650	200 kA	20 kA	72,000	370,250	405,000	246,182	106	56
L70S700	700	700	650	200 kA	20 kA	110,000	526,000	573,000	255,000	128	67
L70S800	800	700	650	200 kA	20 kA	157,082	735,330	762,333	262,949	156	78

© 2023 Littelfuse, Inc.

Ordering Information

SERIES	AMPERAGE RATING	AMP CODE	CATALOG NUMBER	ORDERING NUMBER	PACK QUANTITY	UPC
L70S	10	010	L70S010	L70S010.T	10 Pcs/ Box	07945810161
L70S	15	015	L70S015	L70S015.T	10 Pcs/ Box	07945810163
L70S	20	020	L70S020	L70S020.T	10 Pcs/ Box	07945810164
L70S	25	025	L70S025	L70S025.T	10 Pcs/ Box	07945810165
L70S	30	030	L70S030	L70S030.T	10 Pcs/ Box	07945810166
L70S	35	035	L70S035	L70S035.T	10 Pcs/ Box	07945810152
L70S	40	040	L70S040	L70S040.T	10 Pcs/ Box	07945810167
L70S	50	050	L70S050	L70S050.T	10 Pcs/ Box	07945810168
L70S	60	060	L70S060	L70S060.T	10 Pcs/ Box	07945810169
L70S	70	070	L70S070	L70S070.V	5 Pcs/ Box	07945810170
L70S	80	080	L70S080	L70S080.V	5 Pcs/ Box	07945810171
L70S	90	090	L70S090	L70S090.V	5 Pcs/ Box	07945810172
L70S	100	100	L70S100	L70S100.V	5 Pcs/ Box	07945810173
L70S	125	125	L70S125	L70S125.V	5 Pcs/ Box	07945810174
L70S	150	150	L70S150	L70S150.V	5 Pcs/ Box	07945810175
L70S	175	175	L70S175	L70S175.V	5 Pcs/ Box	07945810176
L70S	200	200	L70S200	L70S200.V	5 Pcs/ Box	07945810177
L70S	225	225	L70S225	L70S225.V	5 Pcs/ Box	07945810188
L70S	250	250	L70S250	L70S250.V	5 Pcs/ Box	07945810178
L70S	300	300	L70S300	L70S300.V	5 Pcs/ Box	07945810179
L70S	350	350	L70S350	L70S350.V	5 Pcs/ Box	07945810180
L70S	400	400	L70S400	L70S400.V	5 Pcs/ Box	07945810181
L70S	450	450	L70S450	L70S450.X	1 Pc/ Box	07945810182
L70S	500	500	L70S500	L70S500.X	1 Pc/ Box	07945810183
L70S	600	600	L70S600	L70S600.X	1 Pc/ Box	07945810184
L70S	700	700	L70S700	L70S700.X	1 Pc/ Box	07945810185
L70S	800	800	L70S800	L70S800.X	1 Pc/ Box	07945810186

Dimensions

AMPERE RATING	FIGURE NO.	DIMENSIONS INCHES (mm)								
		A	B	C	D	E	F	G	H	J
10 – 30	1	2 (50.8)	—	½ (12.7)	9/16 (14.3)	—	—	—	—	—
31 – 60	2	2 7/8 (73.0)	3 7/16 (87.3)	3 3/4 (95.2)	4 3/8 (111.1)	1 (25.4)	43/64 (17.1)	11/32 (8.7)	1/8 (3.2)	—
61 – 100	2	2 7/8 (73.0)	3 9/16 (90.5)	3 11/16 (93.7)	4 3/8 (111.1)	1 7/32 (31.0)	29/32 (22.9)	5/16 (7.9)	3/16 (4.8)	—
101 – 200	2	2 27/32 (72.2)	3 17/32 (89.7)	4 5/32 (105.6)	5 3/32 (129.4)	1½ (38.1)	1 (25.4)	13/32 (10.3)	¼ (6.4)	—
201 – 400	2	2 27/32 (72.2)	3 17/32 (89.7)	4 5/32 (105.6)	5 3/32 (129.4)	2 (50.8)	1½ (38.1)	13/32 (10.3)	¼ (6.4)	—
401 – 600	2	2 27/32 (72.2)	4 29/32 (124.6)	5¼ (133.4)	7 3/32 (180.2)	2½ (63.5)	2 (50.8)	17/32 (13.5)	3/8 (9.5)	—
601 – 800	3	3 5/16 (84.1)	5 5/16 (134.9)	6 13/16 (173.0)	—	2 7/8 (73.0)	2 (50.8)	5/8 (15.9)	3/8 (9.5)	5/16 (7.9)

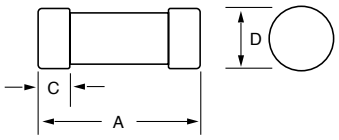

Figure 1

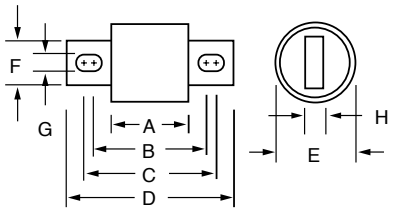

Figure 2

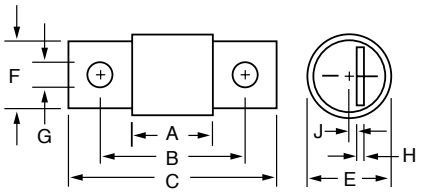

Figure 3

© 2023 Littelfuse, Inc.

POWR-*SPEED*® Fuses

L50S SERIES HIGH-SPEED ROUND BODY

500 V ac • 450 V dc • Very Fast Acting • 10–800 A

Description

Littelfuse L50S series high-speed fuses are designed to protect today's equipment and systems, and are manufactured with Littelfuse-developed technology that sets tomorrow's standards for accuracy, consistent quality, reliability, and predictable performance.

Littelfuse engineers have redefined high-speed fuse technology by using advanced metallurgical, polymer, and materials research, mathematical modeling, and computerized statistical analysis.

Features/Benefits

- Extremely current limiting
- Low watt losses
- Controlled transient over-voltages
- UL Recognized

Applications

- Ac and dc drives
- Dc common bus protection
- Power converters
- UPS
- Soft-starters

Specifications

Voltage Rating	500 V ac 450 V dc
Amperage Rating	10, 12, 15, 20, 25, 30, 35, 40, 50, 60, 70, 80, 90, 100, 125, 150, 175, 200, 225, 250, 275, 300, 350, 400, 450, 500, 550, 600, 700, 800
Interrupting Rating	Ac: 200 kAIC Dc: 20 kAIC
Material	Body: melamine Terminals: copper (silver plated)
Mounting Type	Cylindrical (10–30 A) Bolted tags (35–800 A)
Operating Temperature	-55 °C to +125 °C
Storage Temperature	Up to 35 °C with relative humidity less than 65%
Approvals	UL Recognized (File: E71611) CSA Recognized (File: LR29862)
Environmental	RoHS Compliant
Country of Origin	Mexico

Part Numbering System

L50S xxx .T

Series — L50S

Ampere Code — xxx
(3 digit minimum amperage in decimal form)

Package Quantity — .T
Refer to Pack Qty. Column in Ordering Information Table

SERIES	AMP	CATALOG NUMBER	ORDERING NUMBER
L50S	10	L50S010	L50S010.T
L50S	500	L50S500	L50S500.X

Recommended Fuse Holder

LSCR001 (35–200 A)
LSCR002 (225–800 A)
107/127 Series (10–30A)

Web Resources

Download technical documents: **Littelfuse.com/L50S**

Note: high-speed fuses are designed for fixed installations. They are not intended for use in moving vehicle applications.

© 2023 Littelfuse, Inc.

Electrical Specifications

CATALOG NUMBER	AMPERAGE RATING	VOLTAGE RATING		INTERRUPT RATING		MELTING (PRE-ARC) I^2T (A^2s)	TOTAL CLEARING I^2T (A^2s)	TOTAL CLEARING I^2T (A^2s)	TOTAL CLEARING I^2T (A^2s)	WATTS LOSS AT 100 % RATED CURRENT	WATTS LOSS AT 80 % RATED CURRENT
		AC	DC	AC	DC		100 kA @ 500 V AC	200 kA @ 500 V AC	20 kA @ 450 V DC	(W)	(W)
L50S010	10	500	450	200 kA	20 kA	21	112	128	85	2	1
L50S012	12	500	450	200 kA	20 kA	26	149	170	97	2	1
L50S015	15	500	450	200 kA	20 kA	34	222	250	116	2	2
L50S020	20	500	450	200 kA	20 kA	48	363	400	143	5	3
L50S025	25	500	450	200 kA	20 kA	62	528	600	170	7	4
L50S030	30	500	450	200 kA	20 kA	77	707	820	193	10	5
L50S035	35	500	450	200 kA	20 kA	130	1,120	1,210	400	6	3
L50S040	40	500	450	200 kA	20 kA	161	1,420	1,550	525	7	4
L50S050	50	500	450	200 kA	20 kA	222	2,150	2,360	867	11	6
L50S060	60	500	450	200 kA	20 kA	259	3,016	3,300	1,287	13	7
L50S070	70	500	450	200 kA	20 kA	420	4,100	4,930	1,670	17	10
L50S080	80	500	450	200 kA	20 kA	554	5,300	6,950	2,240	19	10
L50S090	90	500	450	200 kA	20 kA	677	6,750	9,500	2,900	24	13
L50S100	100	500	450	200 kA	20 kA	807	8,273	12,600	3,626	30	16
L50S125	125	500	450	200 kA	20 kA	1,290	13,100	19,000	5,150	22	12
L50S150	150	500	450	200 kA	20 kA	2,504	19,100	26,500	6,700	27	15
L50S175	175	500	450	200 kA	20 kA	3,224	26,300	35,000	8,700	33	17
L50S200	200	500	450	200 kA	20 kA	3,938	34,233	44,583	11,297	35	19
L50S225	225	500	450	200 kA	20 kA	6,034	43,500	56,000	14,750	31	17
L50S250	250	500	450	200 kA	20 kA	7,510	54,000	69,000	19,600	36	19
L50S275	275	500	450	200 kA	20 kA	9,000	65,500	82,000	25,500	41	22
L50S300	300	500	450	200 kA	20 kA	10,808	78,500	97,500	32,200	42	23
L50S350	350	500	450	200 kA	20 kA	16,500	107,000	132,000	50,100	50	28
L50S400	400	500	450	200 kA	20 kA	22,941	142,333	169,667	72,270	58	30
L50S450	450	500	450	200 kA	20 kA	29,300	178,500	208,000	95,000	58	32
L50S500	500	500	450	200 kA	20 kA	37,000	220,000	250,000	118,000	64	35
L50S550	550	500	450	200 kA	20 kA	45,851	311,667	347,333	176,766	75	41
L50S600	600	500	450	200 kA	20 kA	45,851	311,667	347,333	176,766	98	50
L50S700	700	500	450	200 kA	20 kA	82,396	460,000	622,333	289,000	96	51
L50S800	800	500	450	200 kA	20 kA	115,656	647,667	687,500	465,590	118	60

© 2023 Littelfuse, Inc.

Ordering Information

SERIES	AMPERAGE RATING	AMP CODE	CATALOG NUMBER	ORDERING NUMBER	PACK QUANTITY	UPC
L50S	10	010	L50S010	L50S010.T	10 pcs/box	07945885010
L50S	12	012	L50S012	L50S012.T	10 pcs/box	07945885012
L50S	15	015	L50S015	L50S015.T	10 pcs/box	07945885015
L50S	20	020	L50S020	L50S020.T	10 pcs/box	07945885020
L50S	25	025	L50S025	L50S025.T	10 pcs/box	07945885025
L50S	30	030	L50S030	L50S030.T	10 pcs/box	07945885030
L50S	35	035	L50S035	L50S035.T	10 pcs/box	07945885035
L50S	40	040	L50S040	L50S040.T	10 pcs/box	07945885040
L50S	50	050	L50S050	L50S050.T	10 pcs/box	07945885050
L50S	60	060	L50S060	L50S060.T	10 pcs/box	07945885060
L50S	70	070	L50S070	L50S070.T	10 pcs/box	07945885070
L50S	80	080	L50S080	L50S080.T	10 pcs/box	07945885080
L50S	90	090	L50S090	L50S090.T	10 pcs/box	07945885090
L50S	100	100	L50S100	L50S100.T	10 pcs/box	07945885100
L50S	125	125	L50S125	L50S125.V	5 pcs/box	07945885125
L50S	150	150	L50S150	L50S150.V	5 pcs/box	07945885150
L50S	175	175	L50S175	L50S175.V	5 pcs/box	07945885175
L50S	200	200	L50S200	L50S200.V	5 pcs/box	07945885200
L50S	225	225	L50S225	L50S225.V	5 pcs/box	07945885225
L50S	250	250	L50S250	L50S250.V	5 pcs/box	07945885250
L50S	275	275	L50S275	L50S275.V	5 pcs/box	07945885275
L50S	300	300	L50S300	L50S300.V	5 pcs/box	07945885300
L50S	350	350	L50S350	L50S350.V	5 pcs/box	07945885350
L50S	400	400	L50S400	L50S400.V	5 pcs/box	07945885400
L50S	450	450	L50S450	L50S450.X	1 pc/box	07945885450
L50S	500	500	L50S500	L50S500.X	1 pc/box	07945885500
L50S	550	550	L50S550	L50S550.X	1 pc/box	07945885550
L50S	600	600	L50S600	L50S600.X	1 pc/box	07945885600
L50S	700	700	L50S700	L50S700.X	1 pc/box	07945885700
L50S	800	800	L50S800	L50S800.X	1 pc/box	07945885800

Dimensions

AMPERE RATING	FIGURE NO.	DIMENSIONS INCHES (mm)							
		A	B	C	D	E	F	G	H
10–30	1	2 (50.8)	—	½ (12.7)	9/16 (14.3)	—	—	—	—
31–60	2	1⅝ (41.3)	2¼ (57.2)	2½ (63.5)	3 3/16 (81.0)	13/16 (20.6)	23/32 (18.3)	11/32 (8.7)	⅛ (3.2)
61–100	3	2⅛ (54.0)	2 11/16 (68.3)	3 (76.2)	3⅝ (92.1)	1 (25.4)	.670 (17.0)	11/32 (8.7)	⅛ (3.2)
101–200	3	2⅛ (54.0)	2 13/16 (71.4)	2 15/16 (74.6)	3⅝ (92.1)	1 7/32 (31.0)	.895 (22.7)	5/16 (7.9)	3/16 (4.75)
201–400	3	2 3/32 (53.2)	2 25/32 (70.6)	3 13/32 (86.5)	4 11/32 (110.3)	1½ (38.1)	1 (25.4)	13/32 (10.3)	¼ (6.4)
401–600	3	2 7/32 (56.4)	2 29/32 (73.8)	3 17/32 (89.7)	4 15/32 (113.5)	2 (50.8)	1½ (38.1)	13/32 (10.3)	¼ (6.4)
601–800	3	2 7/32 (56.4)	4 9/32 (108.7)	4⅝ (117.5)	6 15/32 (164.3)	2½ (63.5)	2 (50.8)	17/32 (13.5)	⅜ (9.5)

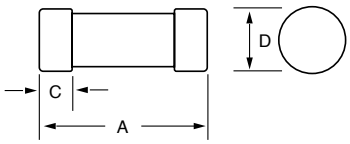

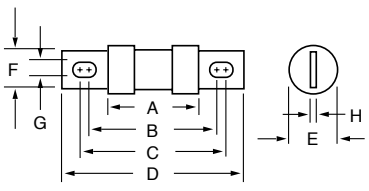

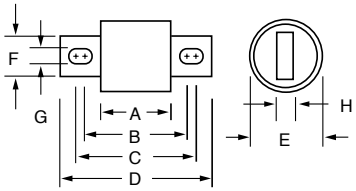

© 2023 Littelfuse, Inc.

POWR-*SPEED*® Fuses

L15S SERIES HIGH-SPEED ROUND BODY

150 V ac • Very Fast-Acting • 1–1000 A

Description

The L15S series is a traditional North American bolted style high-speed fuse for protection of power semiconductor devices that are rated up to 150 V ac and up to 150 V dc Littelfuse POWR-*SPEED*® products offer optimized circuit protection at the extremely fast speed required to protect power semiconductor devices such as silicon controlled rectifiers (SCR's), diodes, thyristors, triacs, transistors, and similar solid-state devices. These devices are used in power equipment including variable speed drives, power rectifiers, UPS systems, dc power supplies, and in a wide range of electronic equipment. May be used wherever extremely fast-acting, current-limiting fuses with no time delay are required.

Features/Benefits

- Compliance with US and Canadian requirements
- Traditional North American bolted style dimensions
- Class aR performance
- Direct bus-bar mount or stud mount design
- RoHS Compliant

Applications

- Power converters (inverters, rectifiers, ups)
- Power supplies
- Industrial heaters
- Variable speed drives
- Battery chargers
- Soft starters

Specifications

Voltage Ratings	Ac: 150 V Dc: 100 V–150 V
Ampere Range	1–1000 A
Interrupting Rating	Ac: 100 kA Dc: 20 kA Self Certified
Approvals	UL Recognized (File: E71611) CSA Recognized (File: LR29862)
Time Constant	10 ms
Material	Body: melamine Cap: copper alloy (silver plated)
Mounting Type	Cylindrical (1–60 A) Bolted Tags (70–1000 A)
Environmental	RoHS
Country of Origin	Mexico
Operating Temperature	-55 °C to +125 °C
Storage Temperature	Up to 35 °C with relative humidity <65 %

Part Numbering System

L15S xxx .T

Series — L15S

Amperage — xxx (3 digit minimum amperage in decimal form)

Package Quantity — .T
T = 10 (1 A–450 A)
V = 5 (500 A–1000 A)

SERIES	AMPERAGE	CATALOG NUMBER	ORDERING NUMBER
L15S	005	L15S005	L15S005.T
L15S	500	L15S500	L15S500.V
L15S	1000	L15S1000	L15S1000V

Recommended Fuse Holders

1LFS101/1LFS102
LSCR001/LSCR002
L60030M series (1-30A)
105/125 Series (1-30A)
109/129 Series (35-60A)

Web Resources

For additional information, visit: **Littelfuse.com/high-speed**

Note: high-speed fuses are designed for fixed installations. They are not intended for use in moving vehicle applications.

© 2023 Littelfuse, Inc.

Electrical Specifications

CATALOG NUMBER	AMPERAGE RATING	VOLTAGE RATING		INTERRUPT RATING	
		AC	DC	AC	DC
L15S001	1	150	150	100 kA	20 kA
L15S002	2	150	150	100 kA	20 kA
L15S003	3	150	150	100 kA	20 kA
L15S004	4	150	150	100 kA	20 kA
L15S005	5	150	150	100 kA	20 kA
L15S006	6	150	150	100 kA	20 kA
L15S007	7	150	150	100 kA	20 kA
L15S008	8	150	150	100 kA	20 kA
L15S009	9	150	150	100 kA	20 kA
L15S010	10	150	150	100 kA	20 kA
L15S012	12	150	150	100 kA	20 kA
L15S015	15	150	150	100 kA	20 kA
L15S020	20	150	150	100 kA	20 kA
L15S025	25	150	150	100 kA	20 kA
L15S035	35	150	150	100 kA	20 kA
L15S040	40	150	150	100 kA	20 kA
L15S045	45	150	150	100 kA	20 kA
L15S050	50	150	150	100 kA	20 kA
L15S060	60	150	150	100 kA	20 kA
L15S070	70	150	100	100 kA	20 kA
L15S080	80	150	100	100 kA	20 kA
L15S090	90	150	100	100 kA	20 kA
L15S100	100	150	100	100 kA	20 kA
L15S125	125	150	100	100 kA	20 kA
L15S150	150	150	100	100 kA	20 kA
L15S200	200	150	100	100 kA	20 kA
L15S250	250	150	100	100 kA	20 kA
L15S300	300	150	100	100 kA	20 kA
L15S350	350	150	100	100 kA	20 kA
L15S400	400	150	100	100 kA	20 kA
L15S450	450	150	100	100 kA	20 kA
L15S500	500	150	100	100 kA	20 kA
L15S600	600	150	100	100 kA	20 kA
L15S800	800	150	100	100 kA	20 kA
L15S1000	1000	150	100	100 kA	20 kA

© 2023 Littelfuse, Inc.

Ordering Information

SERIES	AMPERAGE	AMPERE CODE	CATALOG NUMBER	ORDERING NUMBER	PACK QUANTITY	UPC
L15S	1	001.	L15S001	L15S001.T	10 Pcs/Box	07945800218
L15S	2	002.	L15S002	L15S002.T	10 Pcs/Box	07945800219
L15S	3	003.	L15S003	L15S003.T	10 Pcs/Box	07945800220
L15S	4	004.	L15S004	L15S004.T	10 Pcs/Box	07945800221
L15S	5	005.	L15S005	L15S005.T	10 Pcs/Box	07945800222
L15S	6	006.	L15S006	L15S006.T	10 Pcs/Box	07945800223
L15S	7	007.	L15S007	L15S007.T	10 Pcs/Box	07945800224
L15S	8	008.	L15S008	L15S008.T	10 Pcs/Box	07945800225
L15S	9	009.	L15S009	L15S009.T	10 Pcs/Box	07945800226
L15S	10	010.	L15S010	L15S010.T	10 Pcs/Box	07945800227
L15S	12	012.	L15S012	L15S012.T	10 Pcs/Box	07945800228
L15S	15	015.	L15S015	L15S015.T	10 Pcs/Box	07945800229
L15S	20	020.	L15S020	L15S020.T	10 Pcs/Box	07945800230
L15S	25	025.	L15S025	L15S025.T	10 Pcs/Box	07945800231
L15S	30	030.	L15S030	L15S030.T	10 Pcs/Box	07945800232
L15S	35	035.	L15S035	L15S035.T	10 Pcs/Box	07945800233
L15S	40	040.	L15S040	L15S040.T	10 Pcs/Box	07945800234
L15S	45	045.	L15S045	L15S045.T	10 Pcs/Box	07945800235
L15S	50	050.	L15S050	L15S050.T	10 Pcs/Box	07945800236
L15S	60	060.	L15S060	L15S060.T	10 Pcs/Box	07945800237
L15S	70	070.	L15S070	L15S070.T	10 Pcs/Box	07945800238
L15S	80	080.	L15S080	L15S080.T	10 Pcs/Box	07945800239
L15S	90	090.	L15S090	L15S090.T	10 Pcs/Box	07945800240
L15S	100	100.	L15S100	L15S100.T	10 Pcs/Box	07945800241
L15S	125	125.	L15S125	L15S125.T	10 Pcs/Box	07945800242
L15S	150	150.	L15S150	L15S150.T	10 Pcs/Box	07945800243
L15S	200	200.	L15S200	L15S200.T	10 Pcs/Box	07945800244
L15S	250	250.	L15S250	L15S250.T	10 Pcs/Box	07945800245
L15S	300	300.	L15S300	L15S300.T	10 Pcs/Box	07945800246
L15S	350	350.	L15S350	L15S350.T	10 Pcs/Box	07945800247
L15S	400	400.	L15S400	L15S400.T	10 Pcs/Box	07945800248
L15S	450	450.	L15S450	L15S450.T	10 Pcs/Box	07945800249
L15S	500	500.	L15S500	L15S500.V	5 Pcs/Box	07945800250
L15S	600	600.	L15S600	L15S600.V	5 Pcs/Box	07945800251
L15S	800	800.	L15S800	L15S800.V	5 Pcs/Box	07945800252
L15S	1000	1000	L15S1000	L15S1000V	5 Pcs/Box	07945800253

© 2023 Littelfuse, Inc.

Dimensions

AMPERE RATING	FIG. NO.	DIMENSIONS INCHES (MM)							
		A	B	C	D	E	F	G	H
1 – 30	1	1½ (38.1)	—	⅜ (9.5)	13⁄32 (10.3)	—	—	—	—
31 – 60	1	2 (50.8)	—	⅝ (15.9)	13⁄16 (20.6)	—	—	—	—
61 – 450	2	15⁄32 (29.4)	1⅞ (47.6)	2 3⁄16 (55.6)	2 21⁄32 (67.5)	1 (25.4)	43⁄64 (17.1)	5⁄16 (7.9)	3⁄16 (4.8)
451 – 1000	2	1¼ (31.8)	1 15⁄16 (49.2)	2 9⁄16 (65.1)	3½ (88.9)	1½ (38.1)	1 (25.4)	13⁄32 (10.3)	¼ (6.4)

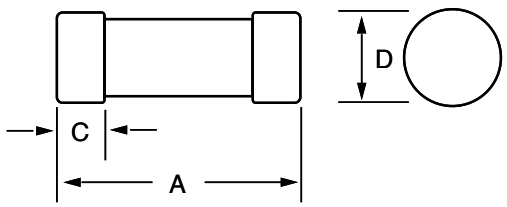

Figure 1

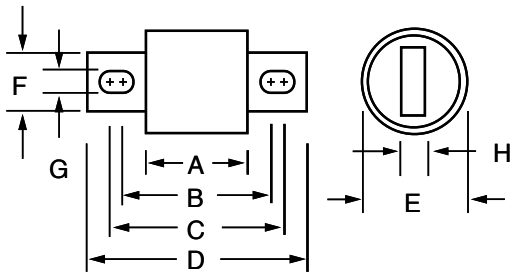

Figure 2

© 2023 Littelfuse, Inc.

POWR-*SPEED*® Fuses

L25S SERIES HIGH-SPEED ROUND BODY

250 V ac • Very Fast-Acting • 1–800 A

Description

The L25S Series is a traditional North American bolted style high-speed fuse for protection of power semiconductor devices that are rated up to 250 V ac and 200 V dc.

Littelfuse POWR-*SPEED*® products offer optimized circuit protection at the extremely fast speed required to protect power semiconductor devices such as silicon controlled rectifiers (SCR's), diodes, thyristors, triacs, transistors, and similar solid-state devices. These devices are used in power equipment including variable speed drives, power rectifiers, UPS systems, dc power supplies, and in a wide range of electronic equipment. May be used wherever extremely fast-acting, current-limiting fuses are used with no time delay required.

Features/Benefits

- Compliance with US and Canadian requirements
- Traditional North American bolted style dimensions
- Class aR performance
- Direct bus-bar mount or stud mount design
- RoHS Compliant applications

Applications

- Power converters (inverters, rectifiers, UPS)
- Power supplies
- Industrial heaters
- Variable speed drives
- Battery chargers
- Soft starters

Specifications

Voltage Ratings	Ac: 250 V Dc: 200 V–250 V
Ampere Range	1–800 A
Interrupting Rating	Ac: 200 kA Dc: 20 kA Self Certified
Approvals	UL Recognized (File: E71611) CSA Recognized (File: LR29862)
Time Constant	10 ms
Material	Body: melamine Caps: copper alloy (silver plated)
Mounting Type	Cylindrical (10–30 A) Bolted Tags (35–800 A)
Environmental	RoHS
Country of Origin	Mexico
Operating Temperature	-55 °C to +125 °C
Storage Temperature	Up to 35 °C with Relative Humidity <65 %

Part Numbering System

L25S xxx .T

Series — L25S

Amperage — xxx (3 digit minimum amperage in decimal form)

Package Quantity — .T
T = (1 A–60 A)
V = (70 A–800 A)

SERIES	AMPERAGE	CATALOG NUMBER	ORDERING NUMBER
L25S	1	L25S001	L25S001.T
L25S	100	L25S100	L25S100.V

Recommended Fuse Holders

1LFS101/1LFS102
LSCR001/LSCR002
107/127 Series (1-30A)
LFH25030 (1-30A)

Web Resources

For additional information, visit: **Littelfuse.com/high-speed**

Note: high-speed fuses are designed for fixed installations. They are not intended for use in moving vehicle applications.

© 2023 Littelfuse, Inc.

Electrical Specifications

CATALOG NUMBER	AMPERAGE RATING	VOLTAGE RATING		INTERRUPT RATING	
		AC	DC	AC	DC
L25S001	1	250	250	200 kA	20 kA
L25S002	2	250	250	200 kA	20 kA
L25S003	3	250	250	200 kA	20 kA
L25S004	4	250	250	200 kA	20 kA
L25S005	5	250	250	200 kA	20 kA
L25S006	6	250	250	200 kA	20 kA
L25S008	8	250	250	200 kA	20 kA
L25S010	10	250	250	200 kA	20 kA
L25S012	12	250	250	200 kA	20 kA
L25S015	15	250	250	200 kA	20 kA
L25S020	20	250	250	200 kA	20 kA
L25S025	25	250	250	200 kA	20 kA
L25S030	30	250	250	200 kA	20 kA
L25S035	35	250	250	200 kA	20 kA
L25S040	40	250	250	200 kA	20 kA
L25S045	45	250	250	200 kA	20 kA
L25S050	50	250	250	200 kA	20 kA
L25S060	60	250	250	200 kA	20 kA
L25S070	70	250	250	200 kA	20 kA
L25S080	80	250	250	200 kA	20 kA
L25S090	90	250	250	200 kA	20 kA
L25S100	100	250	250	200 kA	20 kA
L25S125	125	250	250	200 kA	20 kA
L25S150	150	250	250	200 kA	20 kA
L25S175	175	250	250	200 kA	20 kA
L25S200	200	250	250	200 kA	20 kA
L25S225	225	250	200	200 kA	20 kA
L25S250	250	250	200	200 kA	20 kA
L25S275	275	250	200	200 kA	20 kA
L25S300	300	250	200	200 kA	20 kA
L25S350	350	250	200	200 kA	20 kA
L25S400	400	250	200	200 kA	20 kA
L25S450	450	250	200	200 kA	20 kA
L25S500	500	250	200	200 kA	20 kA
L25S600	600	250	200	200 kA	20 kA
L25S700	700	250	200	200 kA	20 kA
L25S800	800	250	200	200 kA	20 kA

© 2023 Littelfuse, Inc.

Ordering Information

SERIES	AMPERAGE	AMPERE CODE	CATALOG NUMBER	ORDERING NUMBER	PACK QUANTITY	UPC
L25S	1	001.	L25S001	L25S001.T	10 Pcs/Box	07945884001
L25S	2	002.	L25S002	L25S002.T	10 Pcs/Box	07945884002
L25S	3	003.	L25S003	L25S003.T	10 Pcs/Box	07945884003
L25S	4	004.	L25S004	L25S004.T	10 Pcs/Box	07945884004
L25S	5	005.	L25S005	L25S005.T	10 Pcs/Box	07945884005
L25S	6	006.	L25S006	L25S006.T	10 Pcs/Box	07945884006
L25S	8	008.	L25S008	L25S008.T	10 Pcs/Box	07945884008
L25S	10	010.	L25S010	L25S010.T	10 Pcs/Box	07945884010
L25S	12	012.	L25S012	L25S012.T	10 Pcs/Box	07945884012
L25S	15	015.	L25S015	L25S015.T	10 Pcs/Box	07945884015
L25S	20	020.	L25S020	L25S020.T	10 Pcs/Box	07945884020
L25S	25	025.	L25S025	L25S025.T	10 Pcs/Box	07945884025
L25S	30	030.	L25S030	L25S030.T	10 Pcs/Box	07945884030
L25S	35	035.	L25S035	L25S035.T	10 Pcs/Box	07945884035
L25S	40	040.	L25S040	L25S040.T	10 Pcs/Box	07945884040
L25S	45	045.	L25S045	L25S045.T	10 Pcs/Box	07945884045
L25S	50	050.	L25S050	L25S050.T	10 Pcs/Box	07945884050
L25S	60	060.	L25S060	L25S060.T	10 Pcs/Box	07945884060
L25S	70	070.	L25S070	L25S070.V	5 Pcs/Box	07945884070
L25S	80	080.	L25S080	L25S080.V	5 Pcs/Box	07945884080
L25S	90	090.	L25S090	L25S090.V	5 Pcs/Box	07945884090
L25S	100	100.	L25S100	L25S100.V	5 Pcs/Box	07945884100
L25S	125	125.	L25S125	L25S125.V	5 Pcs/Box	07945884125
L25S	150	150.	L25S150	L25S150.V	5 Pcs/Box	07945884150
L25S	175	175.	L25S175	L25S175.V	5 Pcs/Box	07945884175
L25S	200	200.	L25S200	L25S200.V	5 Pcs/Box	07945884200
L25S	225	225.	L25S225	L25S225.V	5 Pcs/Box	07945884225
L25S	250	250.	L25S250	L25S250.V	5 Pcs/Box	07945884250
L25S	275	275.	L25S275	L25S275.V	5 Pcs/Box	07945884275
L25S	300	300.	L25S300	L25S300.V	5 Pcs/Box	07945884300
L25S	350	350.	L25S350	L25S350.V	5 Pcs/Box	07945884350
L25S	400	400.	L25S400	L25S400.V	5 Pcs/Box	07945884400
L25S	450	450.	L25S450	L25S450.V	5 Pcs/Box	07945884450
L25S	500	500.	L25S500	L25S500.V	5 Pcs/Box	07945884500
L25S	600	600.	L25S600	L25S600.V	5 Pcs/Box	07945884600
L25S	700	700.	L25S700	L25S700.V	5 Pcs/Box	07945884700
L25S	800	800.	L25S800	L25S800.V	5 Pcs/Box	07945884800

© 2023 Littelfuse, Inc.

Dimensions

AMPERE RATING	FIG. NO.	DIMENSIONS INCHES (MM)							
		A	B	C	D	E	F	G	H
1 – 30	1	2 (50.8)	—	½ (12.7)	9/16 (14.3)	—	—	—	—
31 – 60	2	1⅝ (41.3)	2¼ (57.2)	2½ (63.5)	3 3/16 (81.0)	13/16 (20.6)	23/32 (18.3)	11/32 (8.7)	⅛ (3.2)
61 – 200	3	1⅝ (41.3)	2 5/16 (58.7)	2 7/16 (61.9)	3⅛ (79.4)	1 7/32 (31.0)	1 (25.4)	5/16 (7.9)	3/16 (4.8)
201 – 700	3	1 19/32 (40.5)	2 9/32 (57.9)	2 29/32 (73.8)	3 27/32 (97.6)	1½ (38.1)	1 (25.4)	13/32 (10.3)	¼ (6.4)
701 – 800	3	1 19/32 (40.5)	2 9/32 (57.9)	2 29/32 (73.8)	3 27/32 (97.6)	2 (50.8)	1½ (38.1)	13/32 (10.3)	¼ (6.4)

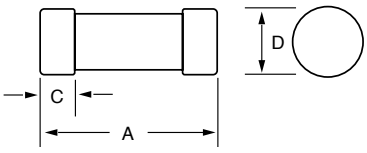

Figure 1

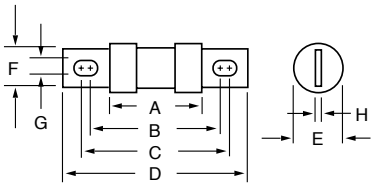

Figure 2

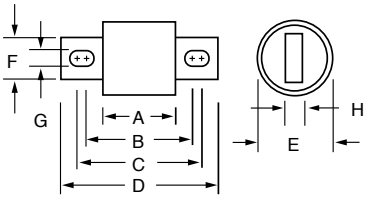

Figure 3

© 2023 Littelfuse, Inc.

POWR-*SPEED*® Fuses

L60S/KLC SERIES HIGH-SPEED ROUND BODY

600 V ac • Very Fast-Acting • 1–800 A

KLC Series

L60S Series

Specifications

Voltage Rating	600 V ac
Ampere Range	1–800 A
Interrupting Rating	200 kA rms
Approvals	UL Recognized (File: E71611) CSA Recognized (File: LR29862)
Mounting Type	Cylindrical (L60S 10–30 A) Bolted Tags (L60S 35-800A; KLC 1–800 A
Material Body:	Melamine Terminals: Copper (silver plated)
Environmental	RoHS Compliant
Country of Origin	Mexico
Operating Temperature	-55 °C to +125 °C
Storage Temperature	Up to 35 °C with relative humidity <65 %

Description

The L60S and KLC series is a traditional North American style high-speed fuse for protection of power semiconductor devices that are rated up to 600 V ac. These fuse series are typically used for replacement purposes only. For new designs L70QS series is recommended.

Features/Benefits

- Compliance with US and Canadian requirements
- Traditional North American cylindrical and bolted style dimensions
- Class aR performance

Applications

- Small power converters
- Power supplies
- Control circuits

Part Numbering System

xxxx xxx X

Series
L60S
KLC

Ampere Code
(3 digit minimum amperage in decimal form)

Package Quantity
X = 1 (110–800 A)
V = 5 (70–100 A)
T = 10 (1–60 A)

Recommended Fuse Holders

1LFS101/1LFS102
LSCR001/LSCR002
109/129 Series (1–30A)
LFH60030 (1–30A)

Web Resources

For additional information, visit: **Littelfuse.com/high-speed**

Note: high-speed fuses are designed for fixed installations. They are not intended for use in moving vehicle applications.

© 2023 Littelfuse, Inc.

Ordering Information

L60S SERIES						
SERIES	AMPERAGE	AMPERE CODE	CATALOG NUMBER	ORDERING NUMBER	PACK QUANTITY	UPC
L60S	1	001.	L60S001	L60S001.T	10 Pcs/Box	07945810100
L60S	2	002.	L60S002	L60S002.T	10 Pcs/Box	07945810101
L60S	3	003.	L60S003	L60S003.T	10 Pcs/Box	07945810102
L60S	4	004.	L60S004	L60S004.T	10 Pcs/Box	07945810103
L60S	5	005.	L60S005	L60S005.T	10 Pcs/Box	07945810104
L60S	6	006.	L60S006	L60S006.T	10 Pcs/Box	07945810105
L60S	8	008.	L60S008	L60S008.T	10 Pcs/Box	07945810107
L60S	10	010.	L60S010	L60S010.T	10 Pcs/Box	07945810108
L60S	12	012.	L60S012	L60S012.T	10 Pcs/Box	07945810109
L60S	15	015.	L60S015	L60S015.T	10 Pcs/Box	07945810110
L60S	17.5	17.5	L60S17.5	L60S17.5T	10 Pcs/Box	07945810135
L60S	20	020.	L60S020	L60S020.T	10 Pcs/Box	07945810111
L60S	25	025.	L60S025	L60S025.T	10 Pcs/Box	07945810112
L60S	30	030.	L60S030	L60S030.T	10 Pcs/Box	07945810113
L60S	35	035.	L60S035	L60S035.T	10 Pcs/Box	07945810114
L60S	40	040.	L60S040	L60S040.T	10 Pcs/Box	07945810115
L60S	45	045.	L60S045	L60S045.T	10 Pcs/Box	07945810116
L60S	50	050.	L60S050	L60S050.T	10 Pcs/Box	07945810117
L60S	60	060.	L60S060	L60S060.T	10 Pcs/Box	07945810118
L60S	70	070.	L60S070	L60S070.V	5 Pcs/Box	07945810119
L60S	80	080.	L60S080	L60S080.V	5 Pcs/Box	07945810120
L60S	90	090.	L60S090	L60S090.V	5 Pcs/Box	07945810121
L60S	100	100.	L60S100	L60S100.V	5 Pcs/Box	07945810122
L60S	125	125.	L60S125	L60S125.X	1 Pcs/Box	07945810123
L60S	150	150.	L60S150	L60S150.X	1 Pcs/Box	07945810124
L60S	175	175.	L60S175	L60S175.X	1 Pcs/Box	07945810125
L60S	200	200.	L60S200	L60S200.X	1 Pcs/Box	07945810126
L60S	225	225.	L60S225	L60S225.X	1 Pcs/Box	07945810137
L60S	250	250.	L60S250	L60S250.X	1 Pcs/Box	07945810127
L60S	300	300.	L60S300	L60S300.X	1 Pcs/Box	07945810128
L60S	350	350.	L60S350	L60S350.X	1 Pcs/Box	07945810129
L60S	400	400.	L60S400	L60S400.X	1 Pcs/Box	07945810130
L60S	450	450.	L60S450	L60S450.X	1 Pcs/Box	07945810131
L60S	500	500.	L60S500	L60S500.X	1 Pcs/Box	07945810132
L60S	600	600.	L60S600	L60S600.X	1 Pcs/Box	07945810133
L60S	700	700.	L60S700	L60S700.X	1 Pcs/Box	07945810136
L60S	800	800.	L60S800	L60S800.X	1 Pcs/Box	07945810134

© 2023 Littelfuse, Inc.

Ordering Information

KLC* SERIES						
SERIES	AMPERAGE	AMPERE CODE	CATALOG NUMBER	ORDERING NUMBER	PACK QUANTITY	UPC
KLC	1	001.	KLC001	0KLC001.T	10 pcs/box	07945823031
KLC	2	002.	KLC002	0KLC002.T	10 pcs/box	07945823041
KLC	3	003.	KLC003	0KLC003.T	10 pcs/box	07945823047
KLC	4	004.	KLC004	0KLC004.T	10 pcs/box	07945823053
KLC	5	005.	KLC005	0KLC005.T	10 pcs/box	07945823055
KLC	6	006.	KLC006	0KLC006.T	10 pcs/box	07945823058
KLC	7	007.	KLC007	0KLC007.T	10 pcs/box	07945823061
KLC	8	008.	KLC008	0KLC008.T	10 pcs/box	07945823063
KLC	10	010.	KLC010	0KLC010.T	10 pcs/box	07945823065
KLC	12	012.	KLC012	0KLC012.T	10 pcs/box	07945823066
KLC	15	015.	KLC015	0KLC015.T	10 pcs/box	07945823068
KLC	17.5	17.5	KLC17.5	0KLC17.5T	10 pcs/box	07945823069
KLC	20	020.	KLC020	0KLC020.T	10 pcs/box	07945823071
KLC	25	025.	KLC025	0KLC025.T	10 pcs/box	07945823072
KLC	30	030.	KLC030	0KLC030.T	10 pcs/box	07945823073
KLC	35	035.	KLC035	0KLC035.T	10 pcs/box	07945823074
KLC	40	040.	KLC040	0KLC040.T	10 pcs/box	07945823075
KLC	45	045.	KLC045	0KLC045.T	10 pcs/box	07945823076
KLC	50	050.	KLC050	0KLC050.T	10 pcs/box	07945823077
KLC	60	060.	KLC060	0KLC060.T	10 pcs/box	07945823078
KLC	70	070.	KLC070	0KLC070.V	5 pcs/box	07945823079
KLC	80	080.	KLC080	0KLC080.V	5 pcs/box	07945823080
KLC	90	090.	KLC090	0KLC090.V	5 pcs/box	07945823081
KLC	100	100.	KLC100	0KLC100.V	5 pcs/box	07945823082
KLC	110	110.	KLC110	0KLC110.X	1 pcs/box	07945823083
KLC	125	125.	KLC125	0KLC125.X	1 pcs/box	07945823084
KLC	150	150.	KLC150	0KLC150.X	1 pcs/box	07945823086
KLC	175	175.	KLC175	0KLC175.X	1 pcs/box	07945823087
KLC	200	200.	KLC200	0KLC200.X	1 pcs/box	07945823088
KLC	225	225.	KLC225	0KLC225.X	1 pcs/box	07945823089
KLC	250	250.	KLC250	0KLC250.X	1 pcs/box	07945823090
KLC	300	300.	KLC300	0KLC300.X	1 pcs/box	07945823091
KLC	350	350.	KLC350	0KLC350.X	1 pcs/box	07945823092
KLC	400	400.	KLC400	0KLC400.X	1 pcs/box	07945823093
KLC	450	450.	KLC450	0KLC450.X	1 pcs/box	07945823095
KLC	500	500.	KLC500	0KLC500.X	1 pcs/box	07945823096
KLC	600	600.	KLC600	0KLC600.X	1 pcs/box	07945823098
KLC	700	700.	KLC700	0KLC700.X	1 pcs/box	07945823101
KLC	800	800.	KLC800	0KLC800.X	1 pcs/box	07945823103

*KLC series fuses are recommended for replacement use only.

© 2023 Littelfuse, Inc.

Dimensions

AMPERE RATING	FIG. NO.	DIMENSIONS INCHES (MM)							
		A	B	C	D	E	F	G	H
L60S SERIES, 600 V AC									
1 – 30	1	5 (127.0)	—	5/8 (15.9)	13/16 (20.6)	—	—	—	—
31 – 60	2	2 25/32 (70.6)	3 7/16 (87.3)	3 11/16 (93.7)	4 3/8 (111.1)	13/16 (20.6)	23/32 (18.3)	11/32 (8.7)	1/8 (3.2)
61 – 100	2	2 29/32 (73.8)	3 17/32 (89.7)	3 25/32 (96.0)	4 15/32 (113.5)	11/16 (27.0)	23/32 (18.3)	11/32 (8.7)	1/8 (3.2)
101 – 200	2	2 29/32 (73.8)	3 9/16 (90.5)	3 3/4 (95.3)	4 13/32 (111.9)	1 5/16 (33.3)	1 (25.4)	5/16 (7.9)	3/16 (4.8)
201 – 400	2	2 29/32 (73.8)	3 31/32 (100.8)	4 5/32 (105.6)	5 1/8 (130.2)	1 37/64 (40.1)	1 (25.4)	1 3/32 (10.3)	1/4 (6.4)
401 – 600	2	2 7/8 (73.0)	3 31/32 (100.8)	4 9/64 (105.2)	5 1/8 (130.2)	2 1/16 (52.8)	1 1/2 (38.1)	1 3/32 (10.3)	1/4 (6.4)
601 – 800	2	3 1/32 (77.0)	5 5/32 (133.4)	5 11/32 (135.7)	7 1/4 (184.2)	2 1/2 (63.5)	2 (50.8)	1 7/32 (13.5)	3/8 (9.5)
KLC SERIES, 600 V AC									
1 – 30	2	1 7/8 (47.6)	2 1/2 (63.5)	—	2 7/8 (73.0)	9/16 (14.3)	13/32 (10.3)	1/4 (6.4)	3/64 (1.2)
31 – 60	2	2 3/4 (69.9)	3 3/8 (85.7)	3 5/8 (92.1)	4 5/16 (109.5)	13/16 (20.6)	23/32 (18.3)	11/32 (8.7)	1/8 (3.2)
61 – 100	3	2 7/8 (73.0)	3 21/32 (92.9)	4 1/16 (103.2)	5 (127.0)	1 (25.4)	3/4 (19.1)	13/32 (10.3)	1/8 (3.2)
101 – 200	3	2 27/32 (72.2)	3 17/32 (89.7)	4 3/8 (111.1)	5 3/32 (129.4)	1 1/2 (38.1)	1 (25.4)	13/32 (10.3)	1/4 (6.4)
201 – 400	3	2 27/32 (72.2)	4 21/32 (118.3)	4 27/32 (123.0)	6 1/4 (158.8)	2 (50.8)	1 5/8 (41.3)	9/16 (14.3)	1/4 (6.4)
401 – 800	3	2 27/32 (72.2)	4 21/32 (118.3)	5 11/32 (135.7)	6 1/4 (158.8)	2 1/2 (63.5)	2 (50.8)	9/16 (14.3)	3/8 (9.5)

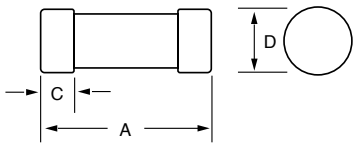

Fig. 1

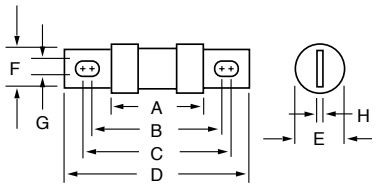

Fig, 2

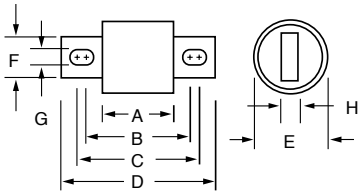

Fig. 3

© 2023 Littelfuse, Inc.

POWR-*SPEED*® Fuse Accessories

LSCR SERIES HIGH-SPEED FUSE BLOCKS

700 V • 1000 V • 1500 V

Specifications

Voltage Rating	700 V / 1000 V / 1500 V
Ampere Rating	400 A, 800 A and 1200 A
Withstand Rating	200 kA / 250 kA
Approvals	UL Recognized (File: E14721) cURus Recognized (E14721) CSA Certified (File: 73160)
Material Base	Molded phenolic or thermoplastic
Terminal Construction	Steel, zinc-plated
Flammability Rating	UL 94 V-0
Environmental	RoHS compliant
Country of Origin	LSCR0xx - China LSCR1xx - USA

Description

Littelfuse LSCR series is a comprehensive line of modular fuse blocks, designed to accommodate a wide range of high-speed and UL power fuses. These LSCR series blocks have a modular stud-type design that enables easy mounting in panel boards.

Features/Benefits

- Modular design reduces inventory requirements
- Sold in pairs for convenience
- Supplied with nut and belleville washer

Web Resources

For more information, visit: **Littelfuse.com/LSCR**

Electrical & Mechanical Specifications

CATALOG/ ORDERING NUMBER	AMPERE RATING	VOLTAGE RATING		INTERRUPTING RATING		INSULATOR		SUGGESTED STUD TORQUE		MOUNTING FASTNER SIZE	SUGGESTED FASTENER TORQUE		AGENCY APPROVALS		
		AC	DC	AC	DC	MATERIAL	MAX. BASE TEMPERATURE	(in.lbs)	(N•m)		(in.lbs)	(N•m)	UR	cURus	CSA
LSCR001	400 A	700 V	1500 V	200 kA	250 kA	Molded Phenolic	150 °C (302 °F)	61	6.8	#10	20–25	2.3–2.8	•		•
LSCR002	800 A	700 V	1500 V	200 kA	250 kA	Molded Phenolic	150 °C (302 °F)	192	21.6	#10	20–25	2.3–2.8	•		•
LSCR101	400 A	1000 V	1000 V	200 kA	200 kA	Thermoplastic	125 °C (257 °F)	67.5–82.5	7.6–9.3	#10	12 max	1.3 max		•	
LSCR102	800 A	1000 V	1000 V	200 kA	200 kA	Thermoplastic	125 °C (257 °F)	207–253	23.4–28.6	#10	12 max	1.3 max		•	
LSCR103	1200 A	1000 V	1000 V	200 kA	200 kA	Thermoplastic	125 °C (257 °F)	270–330	30.5–37.3	¼"	12 max	1.3 max		•	

© 2023 Littelfuse, Inc.

Dimensions mm (inches)

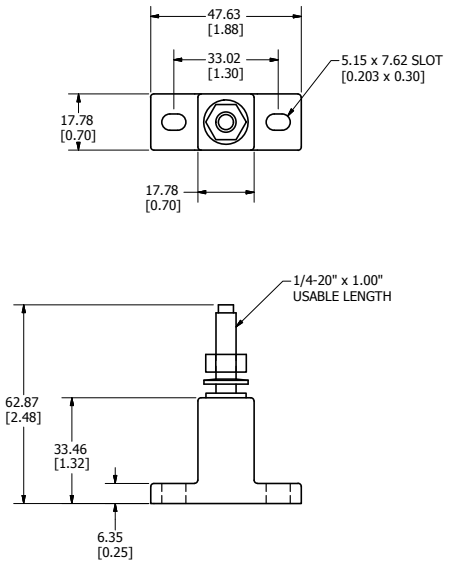

LSCR001

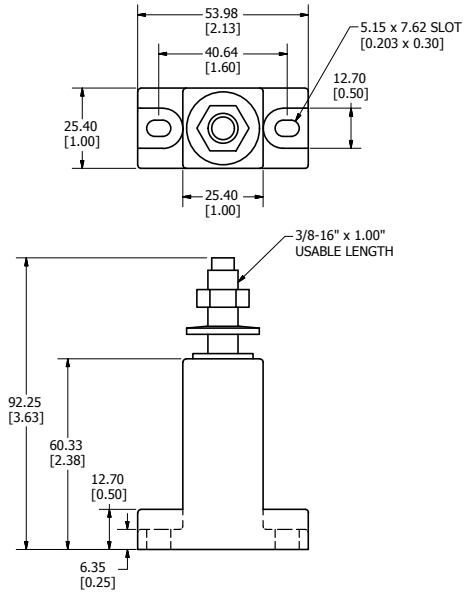

LSCR002

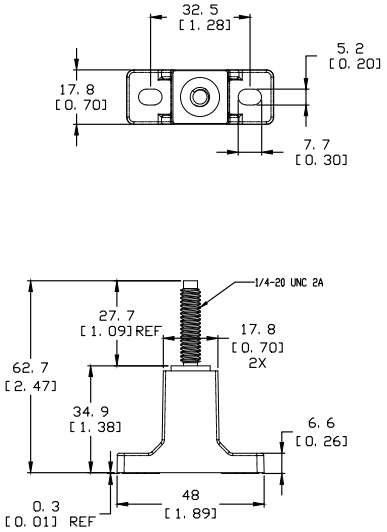

LSCR101

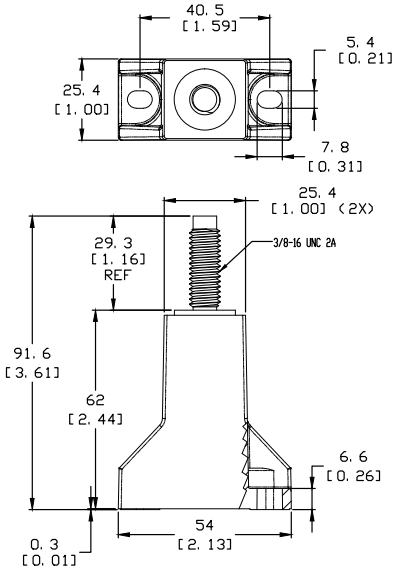

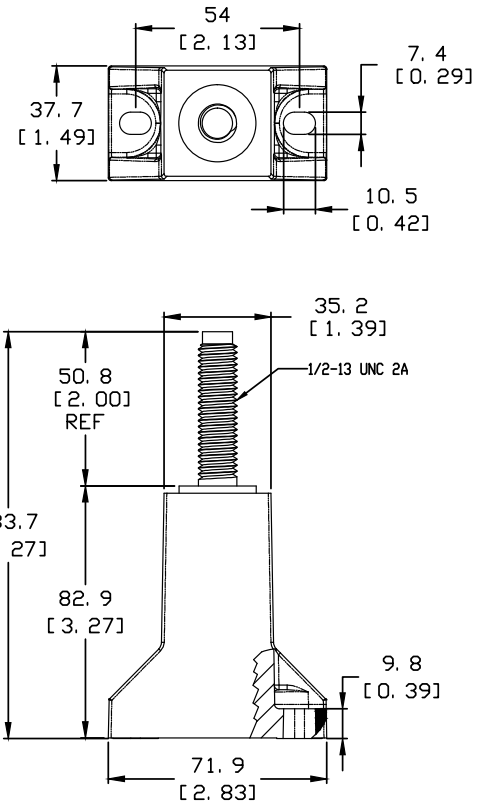

© 2023 Littelfuse, Inc.

High-Speed Fuse Block Selection Guide

FUSE SERIES	CATALOG NUMBER	LSCR001	LSCR002	LSCR101	LSCR102	LSCR103
	TERMINAL SIZE	1/4–20 UNC	3/8–16 UNC	1/4–20 UNC	3/8–16 UNC	1/2–13 UNC
	VOLTAGE RATING	700 V ac/1500 V dc	700 V ac/1500 V dc	1000 V ac/dc	1000 V ac/dc	1000 V ac/dc
	AMPERE RATING	400 A	800 A	400 A	800 A	1200 A
L15S	70–400	X		X		
	500–800		X		X	
L17T	70–250	X		X		
	300–800		X		X	
L25S	35–200	X		X		
	225–800		X		X	
L50S	35–200	X		X		
	225–800		X		X	
	700–800					X
L50QS	35–200	X		X		
	225–800		X		X	
	700–800					X
L60S	35–200	X		X		
	225–800		X		X	
	700–800					X
KLC	35–60	X		X		
	70–800		X		X	
	225–800					X
L70S	35–100	X		X		
	125–800		X		X	
	450–800					X
L70QS	35–100	X		X		
	125–800		X		X	
	450–800					X
JLLN	70–200	X		X		
	225–800		X		X	
	900–1200					X
JLLS	70–200	X		X		
	225–800		X		X	
	900–1200					X
JLS	70–100	X		X		
	110–200	X		X		
	225–400		X		X	
	450–600		X		X	
SPFJ	70–100	X		X		
	125–200	X		X		
	250–400		X		X	
	450					X
L75QS	35–100	X		X		
	125–800		X		X	
	450–800					X

© 2023 Littelfuse, Inc.

High-Speed Fuse Block Selection Guide

FUSE SERIES	CATALOG NUMBER	LSCR001	LSCR002	LSCR101	LSCR102	LSCR103
	TERMINAL SIZE	1/4–20 UNC	3/8–16 UNC	1/4–20 UNC	3/8–16 UNC	1/2–13 UNC
	VOLTAGE RATING	700 V ac/1500 V dc	700 V ac/1500 V dc	1000 V ac/dc	1000 V ac/dc	1000 V ac/dc
	AMPERE RATING	400 A	800 A	400 A	800 A	1200 A
ESR1XLDB	125		X			
ESR1XLUB	125					X
EV1K	60–125	X				
EV1K	150–600		X			
PSR030DL	40–550		X			
PSR030DS	40–550		X			
PSR030UL	40–550		X			
PSR030US	40–550		X			
PSR031DL	200–800		X			
PSR031DS	200–800		X			
PSR031UL	200–800					X
PSR031US	200–800					X
PSR032DL	400–800		X			
PSR032DS	400–800		X			
PSR032UL	400–1100					X
PSR032US	400–1100					X
PSR033DL	450–800		X			
PSR033DS	450–800		X			
PSR070DL	50–315				X	
PSR070UL	50–315		X			
PSR071DL	160–450				X	
PSR071UL	160–450					X
PSR072DL	250–630				X	
PSR072UL	250–630					X
PSR073DL	315–700				X	
PSX1XLDB	80–700		X			
PSX1XLUB	80–700					X
PSX3XLDB	450–630		X			

© 2023 Littelfuse, Inc.

Microswitch for Square Body Fuse

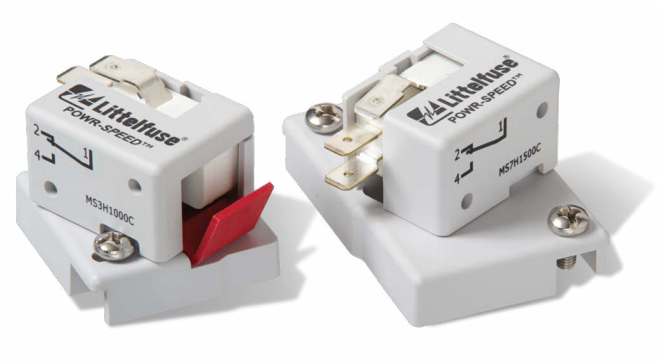

Description

Littelfuse MS series external mount microswitches offer permanent blown fuse indication to PSR and PSX series high-speed square-body semiconductor fuses. They have one normally open (N.O.) and one normally closed (N.C.) contact rated for 4 A, 250 V ac.

These microswitches have a visual red flap or arm indicator that releases after fuse blown condition and can also be used for resetting the microswitch contacts.

Features/Benefits

- Available in three sizes to fit PSR and PSX series fuses
- Internal microswitch UL recognized
- Red flap visual indicator and contact reset mechanism

Specifications

Voltage Rating	See Electrical Characteristics table
Amperage Rating	See Electrical Characteristics table
Operating Temperature	-25 °C to +125 °C
Relative Humidity	85 %
Contact	Silver-nickel plated copper
Approvals	Internal microswitch part number: MS1-16Z0-A150, recognized under UL File: E176213
Flammability	UL 94 V0
Environmental	RoHS Compliant
Country of Origin	China

Electrical Characteristics

CATALOG NUMBER	ORDERING NUMBER	INDICATING STYLE	INSULATION VOLTAGE RATING	COMPATIBLE FUSE SERIES	FUSE CASE SIZE	NON-INDUCTIVE LOAD			PACK QUANTITY
						30 V DC	125 V AC	250 V AC	
MS3H1000C	MS3H1000C	Standard NO-NC	1000	PSR	30, 31, 32, 33	10 A	16 A	4 A	3 Pcs/Bag
MS7H1500C	MS7H1500C	Standard NO-NC	1500	PSR	70, 71, 72, 73	10 A	16 A	4 A	3 Pcs/Bag
MSXL2000C	MSXL2000C	Standard NO-NC	2000	PSX	1XL, 3XL	10 A	16 A	4 A	1 Pcs/Bag

© 2023 Littelfuse, Inc.

Dimensions

MS3H1000C

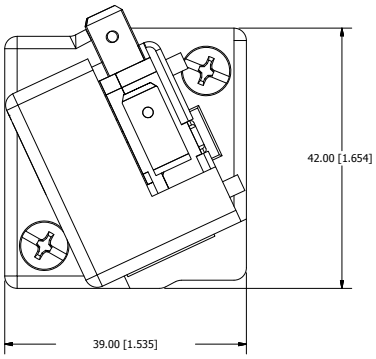

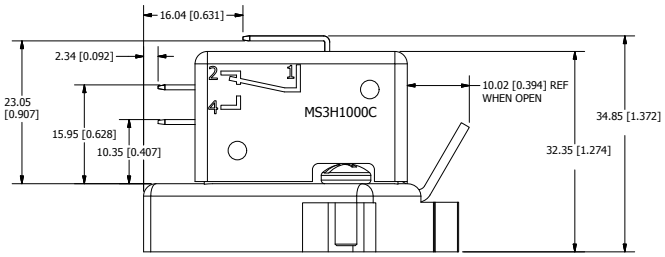

MS7H1500C

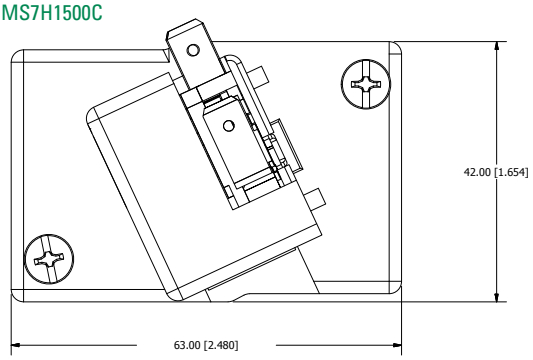

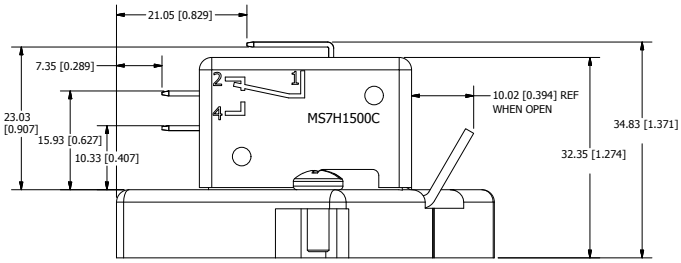

MSXL2000C

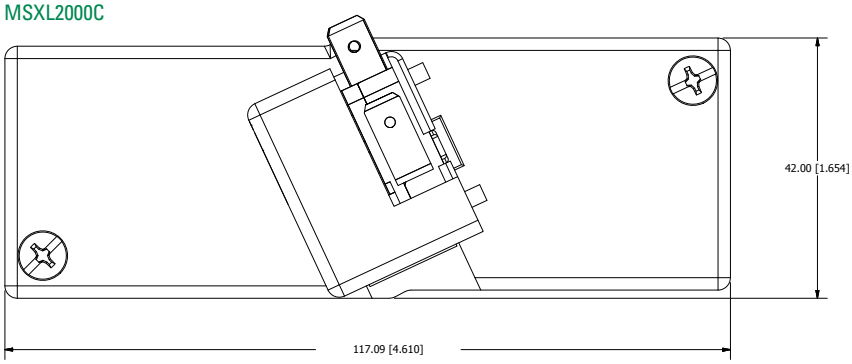

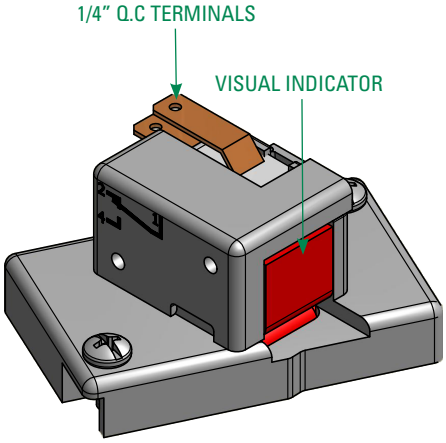

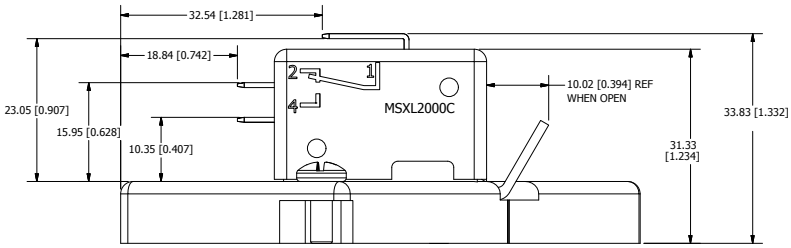

© 2023 Littelfuse, Inc.

170 V dc • Current-Limiting • 70–1200 A

Specifications

Voltage Rating	170 V dc
Interrupting Rating	100 kA
Ampere Range	70–1200 A
Approvals	UL Recognized (File: E71611) CSA Recognized (File: LR29862)

Ordering Information

AMPERE RATINGS						
70	125	200	300	450	800	1100
90	150	225	350	500	900	1200
100	175	250	400	600	1000	—

SERIES	VOLTAGE	AMPERAGE	CATALOG NUMBER	ORDERING NUMBER
L17T	170	1200	L17T 1200	L17T1200V

Dimensions
Inches (mm)

AMPERE RATING	DIMENSIONS INCHES (mm)							
	A	B	C	D	E	F	G	H
70–250	1 5/32 (29.4)	1 7/8 (47.6)	2 3/16 (55.6)	2 21/32 (67.5)	1 (25.4)	7/8 (22.2)	0.327 (8.3)	3/16 (4.8)
300–800	1 1/4 (31.8)	1 15/16 (49.2)	2 9/16 (65.1)	3 1/2 (88.9)	1 1/2 (38.1)	1 (25.4)	13/32 (10.3)	1/4 (6.35)
900–1200	1 11/32 (34.0)	—	—	4 1/16 (103.1)	—	1 1/2 (38.1)	—	1/4 (6.35)

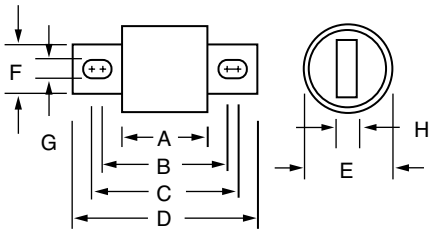

Description

Specifically designed for short-circuit protection of telecommunications circuits, the Littelfuse L17T series fuses provide reliable protection of sensitive dc power distribution systems. Constructed with silver plated elements for low I^2t and peak let-through, these advanced fuses virtually eliminate equipment damage due to surges and spikes. The L17T series fuse unique element geometry also provides cooler running temperatures, helping to minimize heat within enclosures.

Features

- Low I^2t
- Extremely current-limiting
- Low operating temperature
- 170 V dc rating

Recommended Fuse Holders

LTFD 6001 and LTFD 1200 series, visit: **Littelfuse.com/ltfd**

Web Resources

For additional information, visit: **Littelfuse.com/I17t**

© 2023 Littelfuse, Inc.

170 V dc • Current-Limiting • 1–125 A

Description

Littelfuse TLS series fuses are designed specifically for the protection of telecommunications equipment. TLS fuses have been engineered to operate up to 170 V dc to provide current-limiting short-circuit protection for cables and components found in the dc power distribution circuits of telecommunications systems. The compact design and multiple mounting configurations of the TLS series allow it to be used in a variety of applications.

Features

- 170 V dc rating
- Current-limiting
- 1–125 amperes rating
- Multiple mounting configurations — cartridge, vertical, leaded, bolt-in, or solder type. See dimensions on the following pages for mounting style details.
- RoHS Compliant

Applications

- Telecommunication equipment protection
- Short-circuit current protection

Recommended Fuse Holders

- LFTD series disconnect switches
- LFT30060 for TLS series cartridge style fuse

Contact factory for more information.

Web Resources

For additional information, visit: **Littelfuse.com/tls**

Specifications

Voltage Rating	170 V dc
Ampere Range	1–125 amperes
Interrupting Rating	100 kA
Approvals	UL Recognized (File: E71611) TUV (70 kA IR)
Material	Body: glass melamine Caps: silver-plated brass
Environmental	RoHS Compliant, lead (Pb) free
Applicable Standards	UL 248-1 IEC-60269-4

Ordering Information

AMPERE RATINGS				
1	6	25	50	90
2	10	30	60	100
3	15	35	70	110*
5	20	40	80	125*

*Available in standard cartridge, LSE solder, and LR bolt-in.

Part Numbering System

0TLS xxx T –

Series

Amp Code

Package Quantity
T = 10
S = 20 (only LSA)

Mounting Options
Blank = Cartridge
XV = Vertical
XL = Leaded
XLB = Bolt-In
XLS = Solder
XMB = Solder (Mid-Board Mount)
XLSE = Solder†
XLR = Bolt-In†
LSA = Solder

SERIES	AMPERE	MOUNTING METHOD	MOUNTING SUFFIX	CATALOG NUMBER	ORDERING NUMBER	FUSE LABEL ID
TLS	6	Cartridge	–	TLS006	0TLS006.T	TLS 6A
TLS	15	Vertical	V	TLS015V	0TLS015.TXV	TLS 15A-V
TLS	35	Leaded	L	TLS035L	0TLS035.TXL	TLS 35A-L
TLS	50	Bolt-In	LB	TLS050LB	0TLS050.TXLB	TLS 50A-LB
TLS	80	Solder	LS	TLS080LS	0TLS080.TXLS	TLS 80A-LS
TLS	100	Solder	MB	TLS100MB	0TLS100.TXMB	TLS 100A-MB
TLS	125	Solder	LSE	TLS125LSE	0TLS125.TXLSE	TLS 125A-LSE
TLS	125	Bolt-In	LR	TLS125LR	0TLS125.TXLR	TLS 125A-LR
TLS	30	Solder	LSA	TLS030LSA	0TLS030.SLSA	TLS 30A-LSA

†Option is available for 35 to 125 amperage only

© 2023 Littelfuse, Inc.

Dimensions
Millimeters [inches]

Ferrule Version - TLS

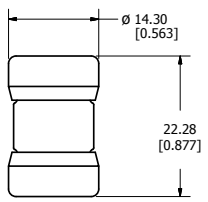

Solder Mount - LS Version

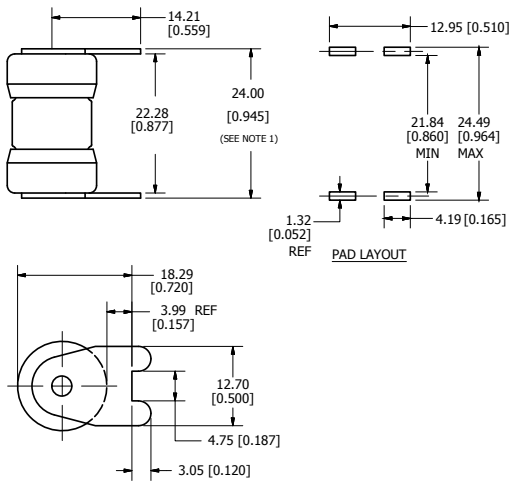

NOTE:
1. MEASUREMENT TAKEN AT END OF TERMINALS.

Solder Mount - LSE Version

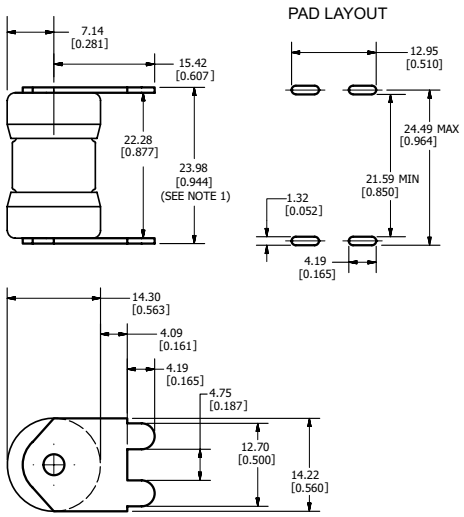

NOTE 1: Measurement taken at end of terminals.

Solder Mount - L Version

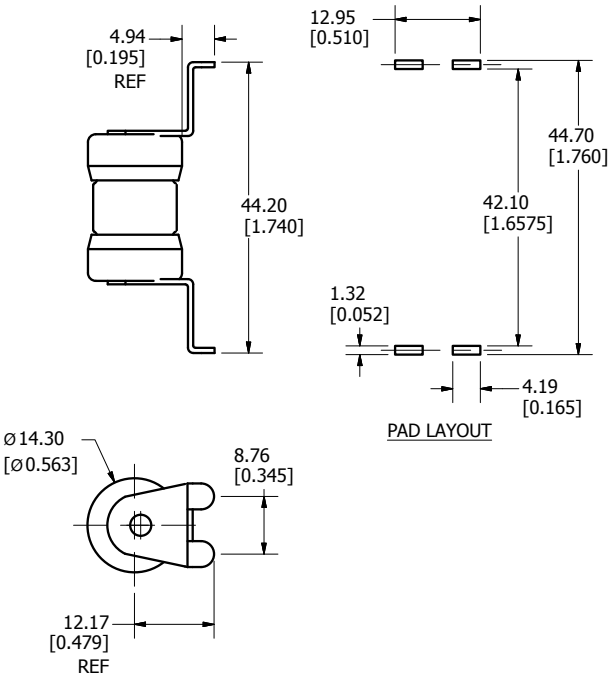

Solder Mount - LSA Version

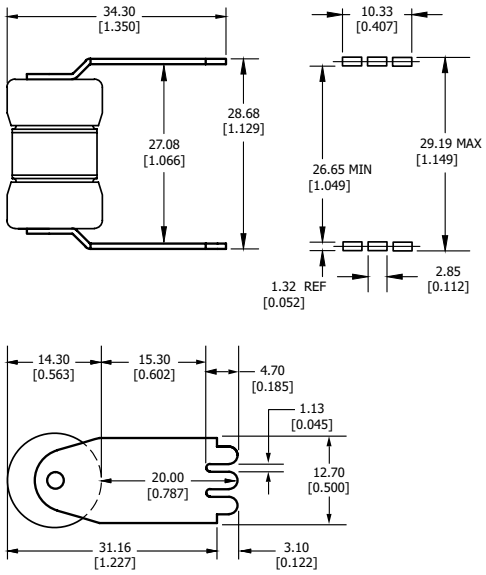

© 2023 Littelfuse, Inc.

Dimensions
Millimeters [inches]

Solder Mount - V Version

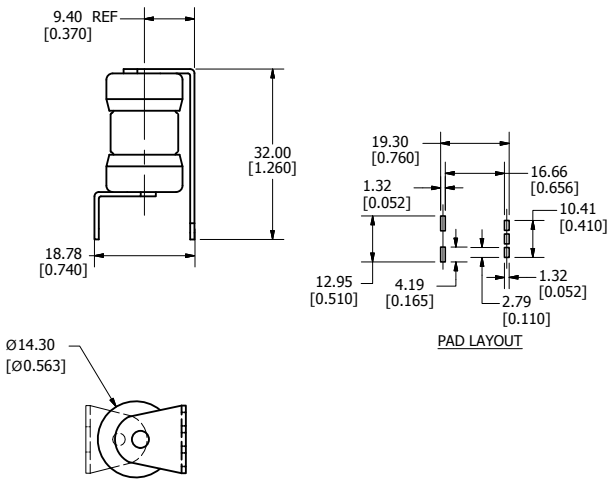

Solder Mount - MB Version

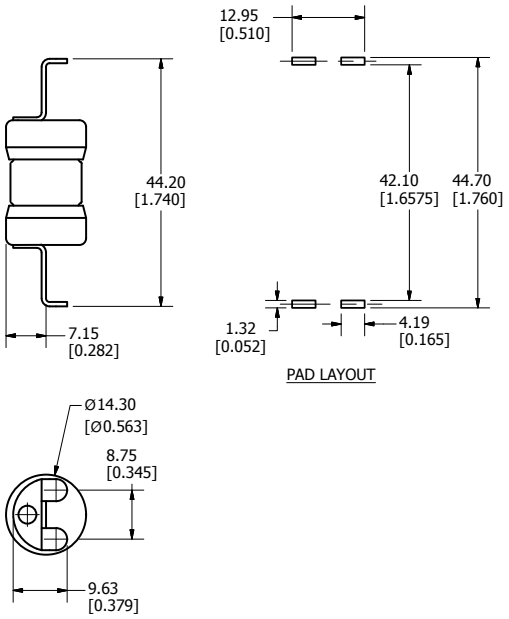

Bolt-In Mount - LR Version

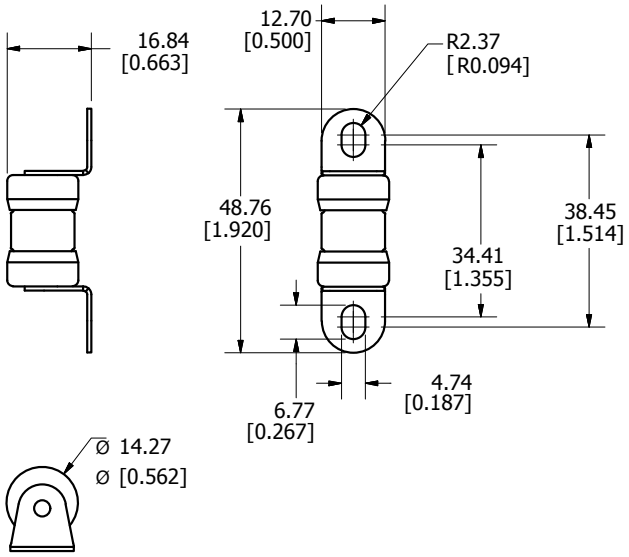

Bolt-In Mount - LB Version

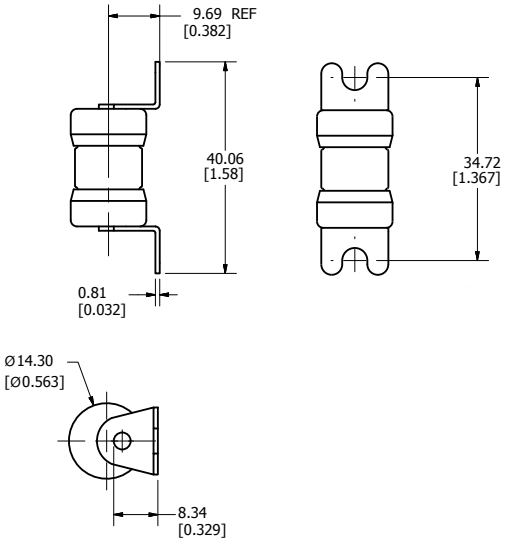

NOTES:

RECOMMENDED HARDWARE: #8 SLOTTED HEX WASHER HEAD MACHINE SCREW

TORQUE: 10 IN-LB

© 2023 Littelfuse, Inc.

POWR-*SPEED*® Fuse
CROSS REFERENCE GUIDE

This guide covers the most popular high-speed fuse types that Littelfuse has in stock and ready to ship. The cross reference is meant to serve as a guide for quick identification and product selection. We suggest you check all applicable specifications before making substitutions.

COMPETITOR	LITTELFUSE
90 203 38 LG	ESR
90-445	PSX
90-447	PSX
170M	PSR
170M (size 4)	PSX
A_UD	PSR
A013F	L15S
A015F	L15S
A015R	L15S
A025F	L25S
A050F	L50S ‡
A060F	L60S
A070F	L70S ‡
A13X	L15S
A25X	L25S †
A50P (type 1 & 4)	L50QS

COMPETITOR	LITTELFUSE
A50QS	L50QS
A60X	L60S
A70P	L70QS
A70QS	L70QS
CHSF	L50QS
ESS3	ESR
FWA	L15S † §
FWH	L50QS
FWP	L70QS
FWX	L25S * †
KAA	L15S
KAB	L25S
KAC	KLC
KBH	L50S ‡
PC_UD	PSR
PSC	PSR

COMPETITOR	LITTELFUSE
PSC_9X	PSX
RFA	L15S
RFC	KLC
RFL (750 V)	L70S (700 V)
RFV	L50S ‡
RSZ307-3-RAZ	ESR
SF13X	L15S
SF25X	L25S
SF50P	L50S ‡
SF60X	L60S
SF70P	L70S ‡
XL25X	L25S
XL50F	L50S * ‡
XL70F	L70S * ‡

* Check specific mounting dimensions before substituting.
† Check characteristics and dimensions for application before substituting.
‡ For replacement purpose only. For new application L50QS or L70QS series are recommended.
§ Verify voltage for dc applications.

For more information or a complete listing of high-speed fuses offered visit Littelfuse.com/POWR-*SPEED* or call 1-800-TEC-FUSE.

Local Resources for a **GLOBAL** Market

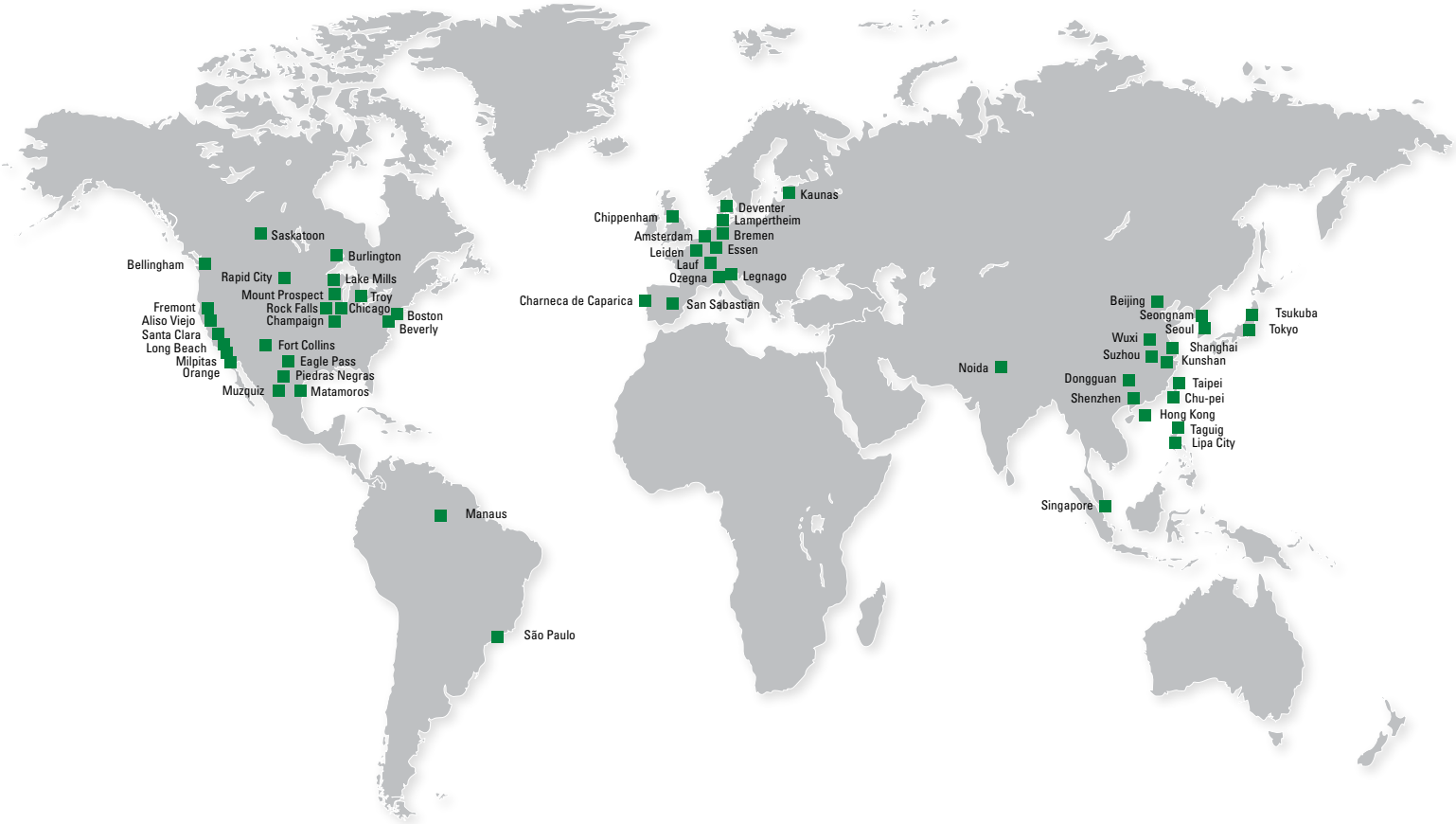

Protection Relays & Controls Catalog (PF130N)

The comprehensive line of electronic and microprocessor-based protection relays safeguard equipment and personnel to prevent expensive damage, downtime or injury due to electrical faults.

Fuses and Fuse Holders Catalog (PF101N)

Littelfuse offers a complete circuit protection portfolio of industrial power fuses, including time-saving indication products for an instant visual blown-fuse identification.

POWR-GARD® Solar Catalog (PF140N)

POWR-GARD® Solar Products are designed specifically for photovoltaic applications where issues such as heat, efficiency, longevity and global standards impact the choices in selecting circuit protection.

To view all Littelfuse product catalogs, visit our website at **littelfuse.com/Catalogs**

Visit Technical Resources at Littelfuse.com

Technical information is only a click away. The Littelfuse Technical Resources contains datasheets, product manuals, whitepapers, application guides, demos, on-line design tools, and more.

An Extension of Your Team

Technical Hotline (800-TEC-FUSE or 800-832-3873)

Littelfuse engineers are a phone call away to help identify potential issues and provide product recommendations to resolve problems.

Application and Field Support

Our experienced product and application engineers work step-by-step with customers from design to installation to determine the best solution.

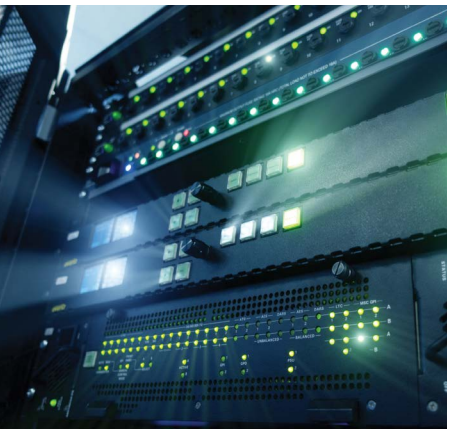

North America

Littelfuse World Headquarters
8755 West Higgins Road, Suite 500
Chicago, IL 60631, USA

Littelfuse SymCom
1241 Concourse Drive
Rapid City, SD 57703, USA

Littelfuse Startco
140 – 15 Innovation Boulevard
(The Galleria Building)
Saskatoon, SK S7N 2X8, Canada
Tel: +1-306-373-5505

Hartland Controls now part of **Littelfuse**
807 Antec Road
Rock Falls, IL 61071, USA
Tel: +1-815-626-5170

Technical Support:
Tel: +1-800-TEC-FUSE
E-mail: techline@littelfuse.com

Customer Service:
Tel: +1-800-227-0029
E-mail: PG_CSG@littelfuse.com

Asia

Littelfuse
Unit 1604B Desay Building,
Gaoxin Nanyi Ave.
Hi-Tech Industrial Park
Nashan District
Shenzen, 518057, China
+86 755 8207 0760

Europe

Littelfuse
Julius-Bamberger-Str. 8a
Bremen, D-28279, Germany
+49 421 82 87 3 147

Littelfuse products are certified to many standards around the world. To check certifications on specific product please refer to the product datasheet on Littelfuse.com.

Disclaimer Notice – Information furnished is believed to be accurate and reliable. However, users should independently evaluate the suitability of and test each product selected for their own applications. Littelfuse products are not designed for, and may not be used in, all applications. **Read complete Disclaimer Notice at www.littelfuse.com/product-disclaimer.**

© 2023 Littelfuse, Inc.

FORM: PF611
Rev: 9-C-121123