INSTALLATION INSTRUCTIONS FOR SYMCOM'S MOTORSAVER®

MODEL 455-480R

MotorSaver® THREE-PHASE ELECTRIC MOTOR PROTECTOR

DANGER!

HAZARDOUS VOLTAGES MAY BE PRESENT DURING INSTALLATION.
Electrical shock can cause death or serious injury.
Installation should be done by qualified personnel following all national, state and local electrical codes.

BE SURE POWER IS DISCONNECTED PRIOR TO INSTALLATION!
FOLLOW NATIONAL, STATE AND LOCAL CODES.
READ THESE INSTRUCTIONS ENTIRELY BEFORE INSTALLATION.

The Model 455-480R, 3-phase voltage monitor combines line and load-side monitoring to alert the user of contactor failure. Line-side monitoring will protect the motor from damaging power conditions including high and low voltage, voltage unbalance, single-phasing, phase reversal and rapid cycling. The Model 455-480R has a high voltage relay to handle up to 600V control voltage and is now equipped with an infrared LED to communicate with the hand-held diagnostic tool, the Informer MS Edition, to display trip points, real-time data, and the last 20 faults and 32 motor starts.

CONNECTIONS

1. Mount the MotorSaver® in a convenient location in or near the motor control panel. If the location is wet or dusty, it should be mounted in a NEMA 4 or 12 enclosure.
2. Connect L1, L2, and L3 on the MotorSaver® to the **LINE SIDE** of the motor starter.
3. Connect M1, M2 and M3 to the power lines on the **LOAD SIDE** of the motor starter.

NOTE: If a 2-pole contactor is used, jump the hard-wired line from the L side terminal (the wire not connected through the contactor) to its corresponding M terminal.

If load-side protection is not desired, connection to the M terminals is not required—the Model 455-480R will operate as a line-side only voltage monitor in this configuration.

4. Connect the output relay to the circuitry to be controlled. Connect the normally open contact in series with the magnetic coil of the motor starter as shown in Figure 1.

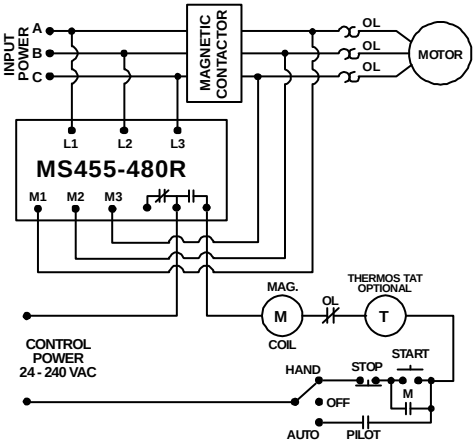

Figure 1: 3-Pole Contactor Wiring Diagram

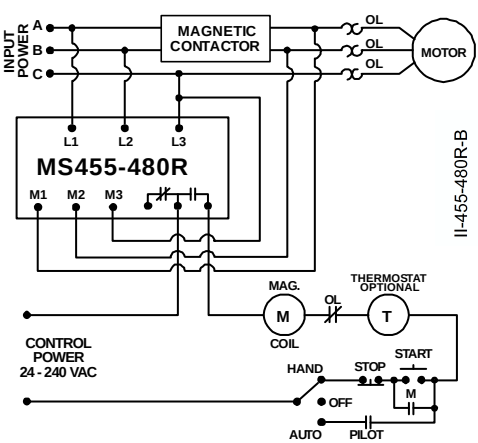

Figure 2: 2-Pole Contactor Wiring Diagram

NOTE: L1 and M1 must be connected to the same supply line as shown. Similarily, L2 and M2, as well as L3 and M3 must be connected to the same supply lines.

www.SymCom.com
...your electronic control & protection specialists

222 Disk Drive, Rapid City, SD 57701
(800) 843-8848 www.symcom.com

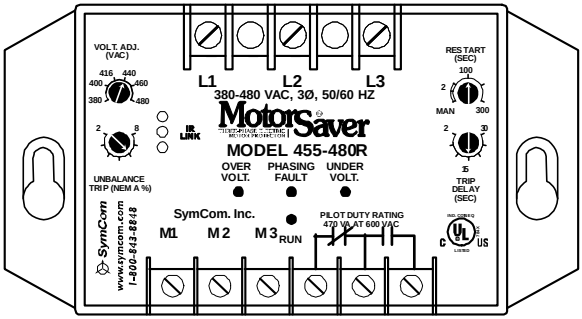

SETTINGS

1. **LINE VOLTAGE ADJUSTMENT:** Rotate the VOLT. ADJ. (VAC) knob to the nominal 3-phase line voltage feeding the motor to be protected.

2. **RESTART DELAY:** Rotate the RESTART (SEC) knob to the desired position. The restart delay is the time between the MotorSaver seeing acceptable power and the MotorSaver closing its output contacts. For compressor applications, the restart delay should be set for the approximate time it takes for the head pressure to bleed off of the compressor. For other applications, the restart delay is typically set to 2 seconds.
   NOTE: This delay is also the minimum cycle time or rapid-cycle timer for the motor or compressor when control power is lost such as the operation of the thermostat.

   The manual position (MAN) on the restart adjustment can be used as a manual reset after any fault condition, or loss of incoming power. To utilize this feature, rotate the restart adjustment to “2” to allow the run light to come on—then rotate the restart delay knob back to the manual position.
   NOTE: When the manual feature is used, the unit will not have rapid-cycle protection if the control power is lost (i.e. thermostat control); but will require a manual reset if any fault or loss of incoming power is experienced.

3. **VOLTAGE UNBALANCE:** Rotate the UNBALANCE TRIP (NEMA %) to the desired voltage unbalance trip level. The NEMA MG1 standard does not recommend operating a motor above a 1% voltage unbalance as determined by the following formula without derating the motor.

$$\% \text{ Voltage Unbalance} = \frac{\text{Maximum Deviation from the Average}}{\text{Average}} \times 100\%$$

The NEMA MG1 standard also recommends against operating a motor above 5% voltage unbalance under any circumstances. Therefore, a 5% UB setting is a good place to start, but SymCom recommends consulting the motor manufacturer for specific tolerances.

4. **TRIP DELAY ADJUSTMENT:** Rotate the TRIP DELAY knob to the desired setting. The adjustment does not affect the trip delay on a single-phasing fault. Typically, the trip delay is set to 4 seconds, in areas where voltage fluctuations are frequent, the trip delay may need to be set higher.

POWER-UP

Turn on the 3-phase power to the motor. The MotorSaver’s green RUN light will blink during the restart delay. After the restart delay, the MotorSaver® will energize its output contacts and the green light will illuminate. If the contacts do not energize and the RUN light does not illuminate, see the TROUBLESHOOTING section.

TROUBLESHOOTING

SYMPTOM	SOLUTION
The RUN light does not blink on initial power-up and all three fault lights are on.	Check the RESTART DELAY. If it is set to the manual position (MAN), the Model 455 is in manual reset mode. Turn the RESTART DELAY out of MAN until the output contacts close.
No LEDs are lit—the unit seems completely dead.	Measure the three line-to-line voltages. If any of the voltages is less than 305VAC, the MotorSaver® does not have enough power to operate its internal electronics. This may occur on a single-phased system.
PHASING FAULT light is blinking on initial power-up.	Turn off the 3-phase power. Swap any two leads powering the Model 455: L1, L2, or L3. There is a 50:50 chance of correctly connecting the leads the first time. Re-apply power.
PHASING FAULT light is blinking after the motor has previously been running.	The incoming lines have been reverse-phased. Swap any two incoming power lines to the magnetic contactor.
The PHASING FAULT light is on and the unit will not reset even though the RESTART DELAY is not in the manual (MAN) position.	Measure incoming lines for correct voltage. If the voltages do not exceed the NEMA unbalance setting, a single-phasing condition has occurred on the load side of the contactor. Check the contacts on the magnetic contactor. If the contacts appear in good condition, check the wiring to M1, M2 and M3. Power must be removed and re-applied to clear this fault condition. If the contacts and wiring are good, call SymCom at (800) 843-8848.
The UNDERVOLT. or OVERVOLT. light is on	Measure the three line-to-line voltages and calculate the average. If the average is outside ±7% of the nominal voltage as set by VOLT. ADJ., the MotorSaver® is functioning properly. If the voltage is within ±7% of the nominal voltage, call SymCom at (800) 843-8848.
The RUN LIGHT blinks, the motor starts momentarily but quickly turns off with the PHASING FAULT light on.	Check the contactor to ensure the contacts and motor wiring are in good condition. Power must be removed and re-applied to clear this fault condition. If the problem persists, call SymCom at (800) 843-8848.

INDICATOR LIGHTS

LED INDICATOR	CONDITION
UNDERVOLTAGE ON	Voltage is less than 93% of nominal voltage as set by the VOLT. ADJ. knob
OVERVOLTAGE ON	Voltage is greater than 107% of nominal voltage as set by VOLT. ADJ.
PHASING FAULT ON	Voltage unbalance is greater than the setting of UNBALANCE TRIP or a single-phasing fault has occurred. If single-phasing has occurred on the load side of the contactor, power must be removed and re-applied to the MotorSaver®.
PHASING FAULT BLINKING	Incoming power is reverse-phased.
UNDERVOLTAGE, OVERVOLTAGE AND PHASING FAULT LIGHTS ON	Unit has been powered up in the manual restart position.
RUN LIGHT ON	Output contact is energized.
RUN LIGHT BLINKING	The MotorSaver® is timing through the restart delay.

MODEL 455-480R SPECIFICATIONS	
3-Phase Line Voltage	380–480VAC
Frequency	50*/60Hz
Low Voltage (% of setpoint)	
Trip	90% ±1%
Reset	93% ±1%
High Voltage (% of setpoint)	
Trip	110% ±1%
Reset	107% ±1%
Voltage Unbalance (NEMA)	
Trip	2–8% (adjustable)
Reset	Trip setting minus 1%
Trip Delay Time	
Low and high voltage, and voltage unbalance	2–30 seconds (adjustable)
Single-phasing faults	2 seconds (fixed)
Restart Delay Time	
After a fault or power loss	Manual, 2–300 seconds (adjustable)
Output Contact Rating – SPDT	
Pilot duty	470VA @ 600VAC
Standards Passed	
Electrostatic Discharge (ESD)	IEC 61000-4-2, Level 3, 6kV contact, 8kV air
Radio Frequency Immunity (RFI)	IEC 61000-4-2, Level 3, 10V/m
Fast transients	IEC 61000-4-4, Level 3, 4kV input power 2kV inputs/outputs
Repeat Accuracy Protection	
Fixed conditions	±0.1%
Power Consumption	6 Watts (max.)
Weight	14 oz.
Terminal	
Torque	7 in.-lbs. (max.)
Operating Temperature	-40° to 70°C (-40° to 158°F)
Safety Marks	
UL	UL508 (File #E68520)

*50Hz will increase all delay timers by 20%

QUESTIONS OR COMMENTS?
PLEASE CALL SYMCOM AT (800) 843-8848 OR (605) 348-5580

SymCom, Inc. warrants its microcontroller-based products against defects in material or workmanship for a period of five (5) years from the date of manufacture. All other products manufactured by SymCom shall be warranted against defects in material or workmanship for a period of two (2) years from the date of manufacture. For complete information on warranty, liability, terms, and conditions, please refer to the SymCom Terms and Conditions of Sale document.

www.SymCom.com
...your electronic control & protection specialists

222 Disk Drive, Rapid City, SD 57701
(800) 843-8848 www.symcom.com