GTCX26-XXXM-R05 Series

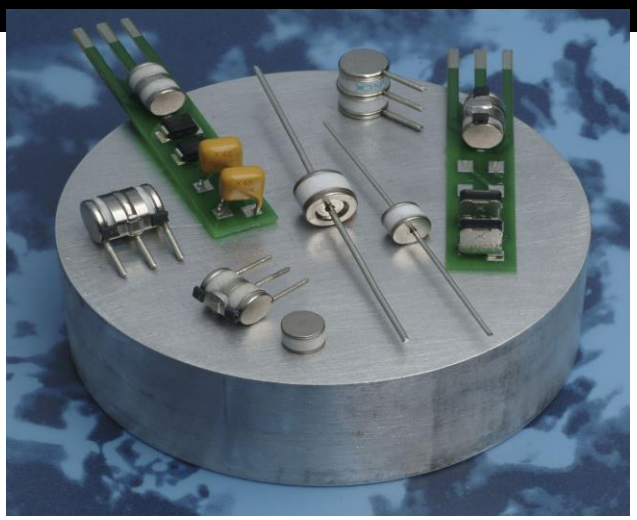

Littelfuse Circuit Protection 6mm 2Pole GDTs (ceramic gas discharge tubes), are commonly used to help protect sensitive telecom equipment such as communication lines, signal lines and data transmission lines from damage caused by transient surge voltages that typically result from lightning strikes and equipment switching operations.

Littelfuse Circuit Protection GDTs offer a high level of surge protection, low capacitance and a broad array of breakover voltage levels, making them suitable for applications such as MDF (Main Distribution Frame) modules, high data-rate telecom applications (e.g. ADSL, VDSL), and surge protection on power lines. Littelfuse Circuit Protection GDTs, can help equipment meet the most stringent regulatory standards.

Benefits:

- Compact, small form factor suitable for efficient assembly
- Helps provide overvoltage fault protection against high energy surges
- Suitable for high-frequency applications

Features:

- 2Pole, 6mm devices
- Broad voltage range from 75V-600V
- Various form factors: surface mount, axial leads, no leads
- Low capacitance and insertion loss
- UL 497B recognized
- RoHS compliant
- Devices tested per ITU K.12 recommendations
- Non-radioactive materials

Applications:

- Telecommunications
  - MDF modules, xDSL equipment, RF system protection, antenna, base station
- Industrial and consumer electronics, such as
  - Surge protectors
  - Alarm system

© 2016 Littelfuse,Inc.
Specifications are subject to change without notice.

GTCX26-XXXM-R05 Series

Device Voltage Ratings and Part Marking

Part Number	DC Sparkover	Impulse Sparkover		DC Holdover Voltage	On-State Voltage
	@100V/s ±20% Tolerance (V)	@100 V/µs (V)	@1000 V/µs (V)	Per ITU K.12 (<150ms) (V)	Nominal (@ 1A) (V)
GTCX26-750M-R05	75	450	550	<52	20
GTCX26-900M-R05	90	450	550	<52	20
GTCX26-141M-R05	140	500	600	<80	20
GTCX26-151M-R05	150	500	600	<80	20
GTCX26-201M-R05	200	600	700	<135	20
GTCX26-231M-R05	230	600	700	<135	20
GTCX26-251M-R05	250	600	700	<135	20
GTCX26-261M-R05	260	700	800	<135	20
GTCX26-301M-R05	300	800	900	<150	20
GTCX26-351M-R05	350	900	1000	<150	20
GTCX26-401M-R05	400	900	1000	<150	20
GTCX26-421M-R05	420	900	1000	<150	20
GTCX26-471M-R05	470	1050	1150	<150	20
GTCX26-501M-R05	500	1100	1200	<150	20
GTCX26-551M-R05	550	1300	1400	<150	20
GTCX26-601M-R05	600	1300	1400	<150	20

Device Surge Rating, Capacitance, Insulation Resistance, UL

Part Number	Impulse Discharge Current	Impulse Life	AC Discharge Current (1sec duration; 10 hits)	Capacitance	Insulation Resistance	UL Rating
	8x20µs 10 hits	10x1000µs 300 hits	@50 Hz	@1Mhz	@100V*	UL497B #E179610
GTCX26-XXXM-R05	5kA	100A	5Arms	<1pF	10,000 (MΩ)	All Devices

Devices <=90V measured @ 50V
Devices >=500V measured @ 250V

© 2016 Littelfuse,Inc.
Specifications are subject to change without notice.
Revised July 26,2016

GTCX26-XXXM-R05 Series

Product Dimensions

DIMENSIONS = MILLIMETERS [INCHES]

Surface-mount (GTCS26-XXXM-R05)

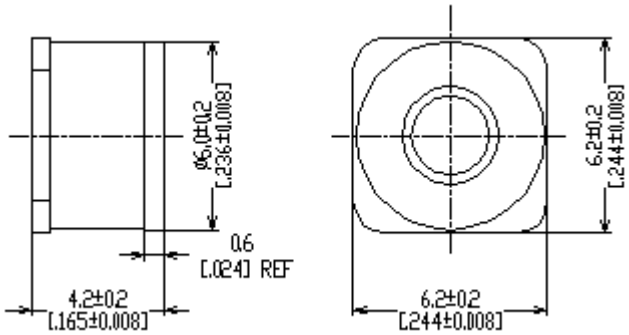

No Leads (GTCN26-XXXM-R05)

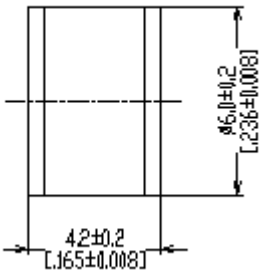

Axial Leads (GTCA26-XXXM-R05)

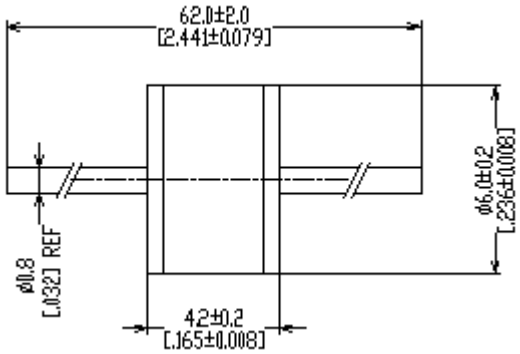

Pad Layout – Surface- mount Devices (GTCS26-XXXM-R05)

	X	Y	Z
	NOM	NOM	NOM
mm:	7.0	3.7	1.3
in*:	(0.276)	(0.146)	(0.051)

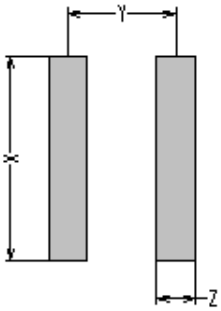

© 2016 Littelfuse,Inc.
Specifications are subject to change without notice.
Revised July 26,2016

GTCX26-XXXM-R05 Series

General Characteristics

No Radioactive Material
Storage Temperature: -40ºC to +90ºC
Operating Temperature: -40ºC to +90ºC
Body: Nickel Plated
Leads: Surface-mount, Axial Devices: Tin Plated
Devices with No Leads: Nickel Plated
Soldering Note: Devices with no leads are non-solderable; meant for insertion into magazine clips

Packaging Information

Part Description		Tray / Reel	Standard Package
No Leads:	GTCN26-XXXM-R05	100pcs	2,000pcs
Axial Leads:	GTCA26-XXXM-R05	100pcs	1,000pcs
Surface-mount:	GTCS26-XXXM-R05	100pcs	2,000pcs
Surface-mount (T&R):	GTCS26-XXXM-R05-2	750pcs	6000pcs

Part Numbering System

Example Part Number: GTCX26-351M-R05

GT =	Gas Tube
C =	Ceramic
X =	Lead Configuration: **N**= No leads; **A**= Axial Leads; **S**= Surface-mount
2 =	2 Electrode device
6 =	6mm Diameter
351 =	DC Spark Over Voltage of 350V (at 100V/s)
M =	Tolerance of 20% on DC Spark Over Voltage
R =	Product Family Designator
05 =	Surge rating: 8x20µs 5kA 10 times

© 2016 Littelfuse,Inc.
Specifications are subject to change without notice.

GTCX26-XXXM-R05 Series

Part Marking Reference

Example Part Marking: XX 35 R05 GN

XX =	Manufacture Mark
35 =	Voltage Designator (35 = 350V)
R05 =	Product Family Designator + Surge Current 5kA (8x20µs 10 hits)
GN =	Year and Week of Manufacture

© 2016 Littelfuse,Inc.
Specifications are subject to change without notice.
Revised July 26,2016

GTCX26-XXXM-R05 Series

Littelfuse products are not designed for, and shall not be used for, any purpose (including, without limitation, automotive, military, aerospace, medical, life-saving, life-sustaining or nuclear facility applications, devices intended for surgical implant into the body, or any other application in which the failure or lack of desired operation of the product may result in personal injury, death, or property damage) other than those expressly set forth in applicable Littelfuse product documentation. Warranties granted by Littelfuse shall be deemed void for products used for any purpose not expressly set forth in applicable Littelfuse documentation. Littelfuse shall not be liable for any claims or damages arising out of products used in applications not expressly intended by Littelfuse as set forth in applicable Littelfuse documentation. The sale and use of Littelfuse products is subject to Littelfuse Terms and Conditions of Sale, unless otherwise agreed by Littelfuse.