Gas Discharge Tubes
GTCX38-XXXM-R10 Series

Littelfuse Circuit Protection 8mm 3Pole GDTs (ceramic gas discharge tubes), are commonly used to help protect sensitive telecom equipment such as communication lines, signal lines and data transmission lines from damage caused by transient surge voltages that typically result from lightning strikes and equipment switching operations.

Littelfuse Circuit Protection GDTs offer a high level of surge protection, low capacitance and a broad array of breakover voltage levels, making them suitable for applications such as MDF (Main Distribution Frame) modules, high data-rate telecom applications (e.g. ADSL, VDSL), and surge protection on power lines. Littelfuse Circuit Protection GDTs can help equipment meet the most stringent regulatory standards.

Benefits:

- Helps provide overvoltage fault protection against high energy surges
- Suitable for high-frequency applications

Features:

- 3Pole, 8mm devices
- Broad voltage range from 75V-600V
- Various form factors: surface-mount, leaded, no leads
- Optional fail-short mechanism on some devices
- Low capacitance and insertion loss
- Crowbar overvoltage protection
- UL 497B recognized
- RoHS compliant
- Devices tested per ITU K.12 recommendations
- Non-radioactive materials

Applications:

- Telecommunications
  - MDF modules, xDSL equipment, RF system protection, antenna, base station
- Industrial and consumer electronics, such as
  - Surge protectors
  - Alarm system

© 2016 Littelfuse,Inc.
Specifications are subject to change without notice.

GTCX38-XXXM-R10 Series

Device Voltage Ratings and Part Marking

Part Number	DC Sparkover	Impulse Sparkover		DC Holdover Voltage	On-State Voltage
	@100V/s ±20% Tolerance (V)	@100 Vμs (V)	@1000 Vμs (V)	Per ITU K.12 (<150ms) (V)	Nominal (@ 1A) (V)
GTCX38-750M-R10	75	450	550	<52	20
GTCX38-900M-R10	90	450	550	<52	20
GTCX38-141M-R10	140	500	600	<80	20
GTCX38-151M-R10	150	500	600	<80	20
GTCX38-201M-R10	200	600	700	<135	20
GTCX38-231M-R10	230	600	700	<135	20
GTCX38-251M-R10	250	600	700	<135	20
GTCX38-261M-R10	260	700	800	<135	20
GTCX38-301M-R10	300	800	900	<150	20
GTCX38-351M-R10	350	900	1000	<150	20
GTCX38-401M-R10	400	900	1000	<150	20
GTCX38-421M-R10	420	900	1000	<150	20
GTCX38-471M-R10	470	1050	1150	<150	20
GTCX38-501M-R10	500	1100	1200	<150	20
GTCX38-551M-R10	550	1300	1400	<150	20
GTCX38-601M-R10	600	1300	1400	<150	20

Device Surge Rating, Capacitance, Insulation Resistance, UL

Part Number	Impulse Discharge Current	Impulse Life	AC Discharge Current (1sec duration; 10 hits)	Capacitance	Insulation Resistance	UL Rating
	8x20μs 10 hits	10x1000μs 300 hits	@50 Hz	@1Mhz	@100V*	UL497B #E179610
GTCX38-XXXM-R10	10kA	200A	10Arms	<1pF	10,000 (MΩ)	All Devices

* Devices <=150V measured @ 50V.
Devices >= 500V measured @ 250V

© 2016 Littelfuse,Inc.
Specifications are subject to change without notice.

GTCX38-XXXM-R10 Series

Product Dimensions

DIMENSIONS = MILLIMETERS [INCHES]

Axial Leaded with- FS (GTCA38-XXXM-R10-FS2)

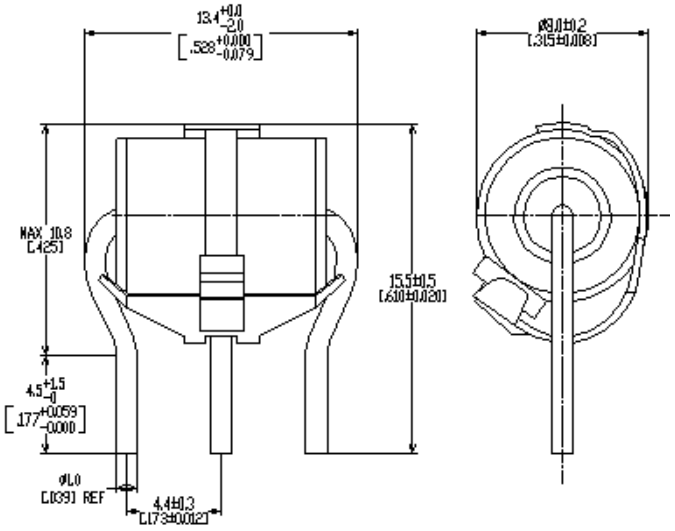

Axial Leaded with-FS (GTCA38-XXXM-R10-FS)

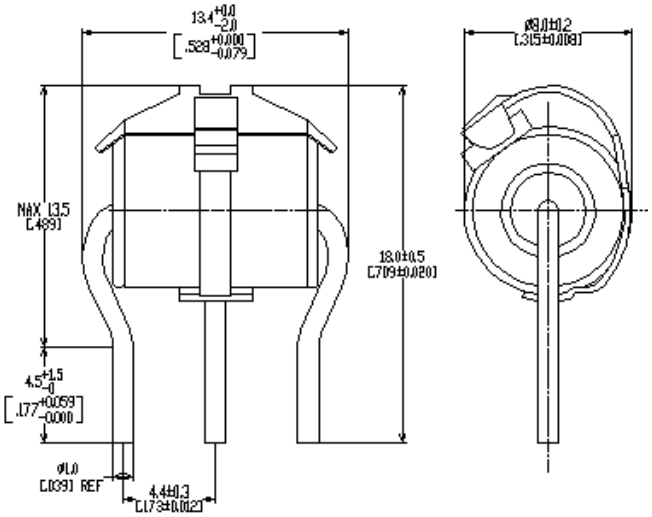

Axial Leaded with- FT (GTCA38-XXXM-R10-FT)

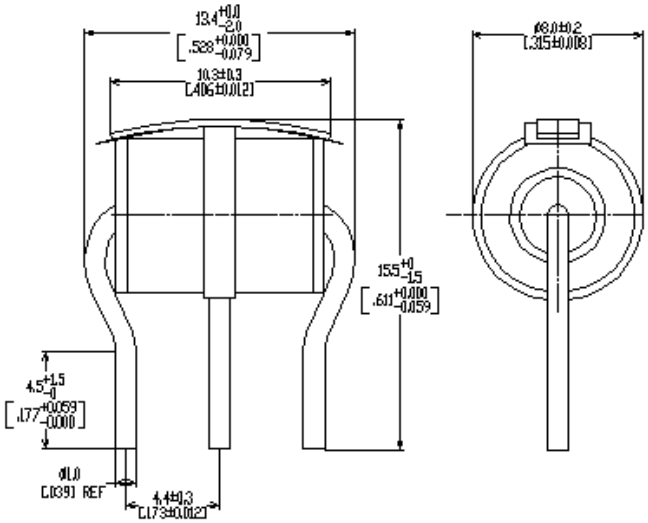

Axial Leaded (GTCA38-XXXM-R10)

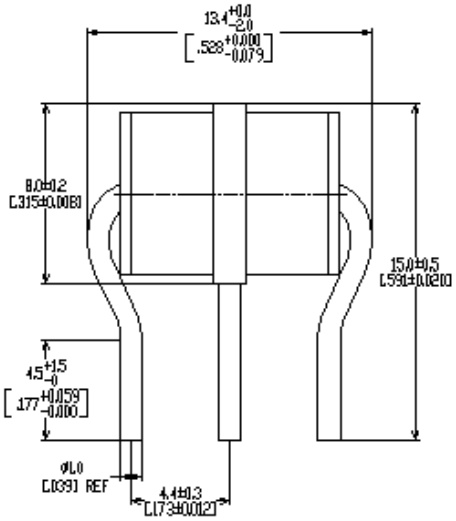

© 2016 Littelfuse,Inc.
Specifications are subject to change without notice.

GTCX38-XXXM-R10 Series

Radial Leaded with- FT (GTCR38-XXXM-R10-FT)

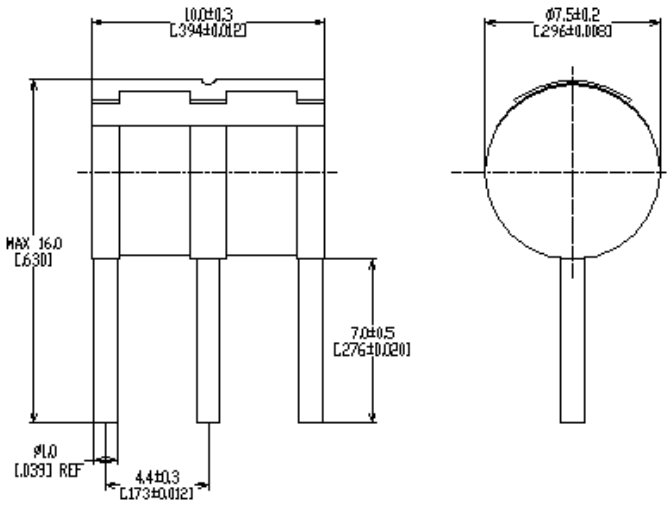

Radial Leaded with-FS (GTCR38-XXXM-R10-FS2)

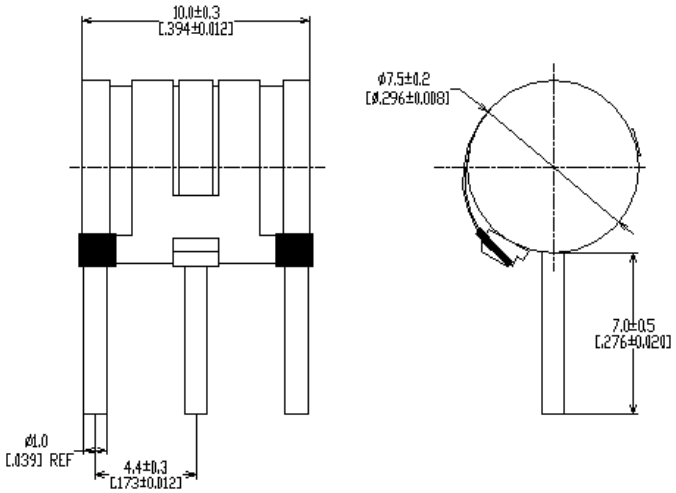

Radial Leaded with-FS (GTCR38-XXXM-R10-FS)

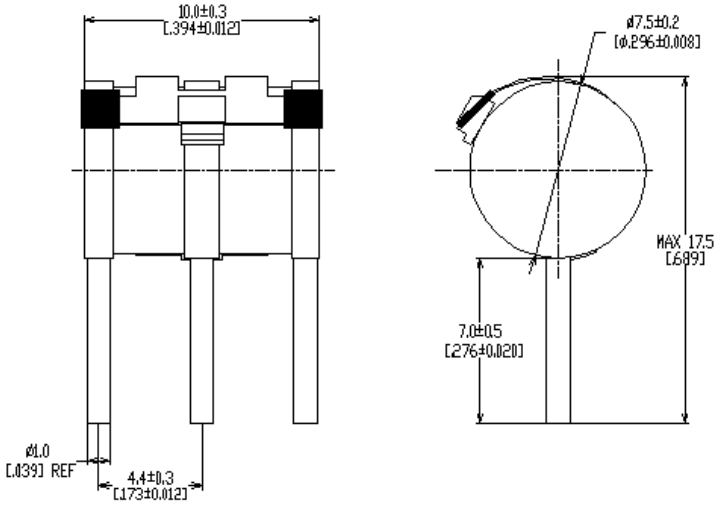

Radial Leaded (GTCR38-XXXM-R10)

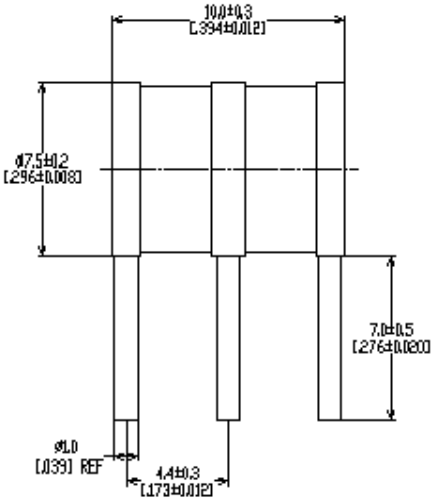

© 2016 Littelfuse,Inc.
Specifications are subject to change without notice.

GTCX38-XXXM-R10 Series

No Leads with-FT (GTCN38-XXXM-R10-FT)

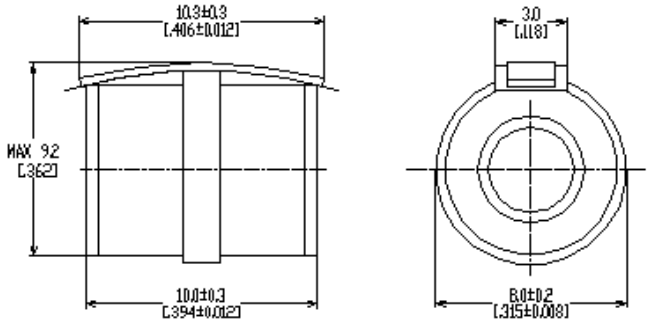

No Leads (GTCN38-XXXM-R10)

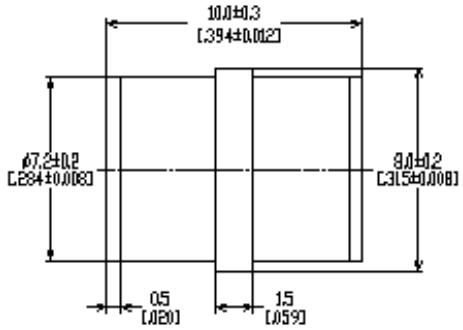

Surface-mount (GTCS38-XXXM-R10)

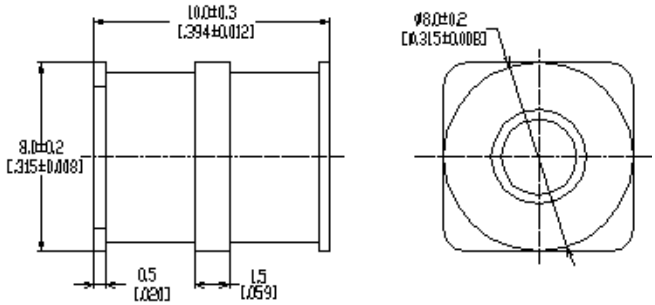

Pad Layout – Surface-mount Devices (GTCS38-XXXM-R10)

	X	Y1	Y2	Z1	Z2
	NOM	NOM	NOM	NOM	NOM
mm:	9.0	4.65	4.65	2.5	1.5
in*:	(0.354)	(0.183)	(0.183)	(0.098)	(0.059)

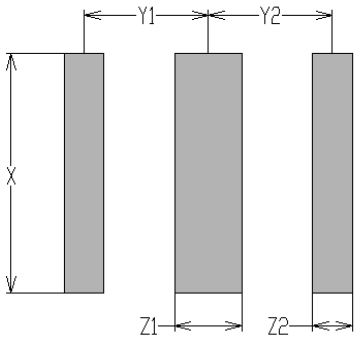

© 2016 Littelfuse,Inc.
Specifications are subject to change without notice.

GTCX38-XXXM-R10 Series

General Characteristics

No Radioactive Material
Storage Temperature: -40ºC to +90ºC
Operating Temperature: -40ºC to +90ºC
Body: Nickel Plated
Leads: Surface-mount, Radial and Axial Devices: Tin Plated
Devices with no leads: Nickel Plated
Soldering Notes: Devices with no leads: non-solderable; suitable for insertion into a magazine clip

Materials Information

RoHS Compliant	ELV Compliant
Directive 2002/95/EC Compliant	Directive 2000/53/EC Compliant

Packaging Information

Part Description		Tray / Reel	Standard Package
No Leaded:	GTCN38-XXXM-R10(-FT)	100pcs (Tray)	1,000pcs
With Leads:	GTCA38-XXXM-R10(-FT/-FS(2)) GTCR38-XXXM-R10(-FT/-FS(2))	100pcs (Tray)	1,000pcs
Surface-mount:	GTCS38-XXXM-R10(-FT)	100pcs (Tray)	1,000pcs
Surface-mount (T&R):	GTCS38-XXXM-R10-2	500pcs (Reel)	3,000pcs

Part Numbering System

Example Part Number: GTCX38-351M-R10-FT/FS/ FS2

GT =	Gas Tube
C =	Ceramic
X =	Lead Configuration: **N**= No leads; **A**= Axial Leads; **S**= Surface-mount; **T**= T Configuration Leads; R= Radial Leads
3 =	3 Electrode device
8 =	8mm Diameter
351 =	DC Spark Over Voltage of 350V (at 100V/s)
M =	Tolerance of 20% on DC Spark Over Voltage
R =	Product Family Designator
10 =	Surge rating: 8x20µs 10kA 10 times
FT/FS/FS2 =	With Fail-Short mechanism (FT=plastic fail short mechanism on top; FS=solder pellet fail short mechanism on top; FS2=solder pellet fail short mechanism on bottom)

© 2016 Littelfuse,Inc.
Specifications are subject to change without notice.

GTCX38-XXXM-R10 Series

Part Marking Reference

Example Part Marking: XX 35 R10 GN

XX =	Manufacture Mark
35 =	Voltage Designator (35 = 350V)
R10 =	Product Family Designator + Surge Current 10kA (8x20µs 10 hits)
GN =	Year and Week of Manufacture

Littelfuse products are not designed for, and shall not be used for, any purpose (including, without limitation, automotive, military, aerospace, medical, life-saving, life-sustaining or nuclear facility applications, devices intended for surgical implant into the body, or any other application in which the failure or lack of desired operation of the product may result in personal injury, death, or property damage) other than those expressly set forth in applicable Littelfuse product documentation. Warranties granted by Littelfuse shall be deemed void for products used for any purpose not expressly set forth in applicable Littelfuse documentation. Littelfuse shall not be liable for any claims or damages arising out of products used in applications not expressly intended by Littelfuse as set forth in applicable Littelfuse documentation. The sale and use of Littelfuse products is subject to Littelfuse Terms and Conditions of Sale, unless otherwise agreed by Littelfuse.